Rodney Industries



SEWER & CIVIL FITTINGS

MAY 2026


REAL PEOPLE
REAL PRODUCTS
REAL SOLUTIONS

TABLE OF CONTENTS



SEWERTECH

Sewertech is dual wall co-extruded black over light grey high density polyethylene pipe and is the latest combination of raw materials and pipeline design technology. It is the first-ever purpose built pipe for pipe bursting and slip lining applications and is designed specifically for the waste-water industry, making it most suitable for gravity sewerage and drainage applications.

The black external layer provides high scratch and UV resistance, while the light coloured internal layer provides good reflection properties for manual and video inspection purposes.





BENEFITS

- High tensile strength to withstand installation forces
- Low friction external surface for ease of insertion
- Low friction internal surface for hydraulic efficiency and low residual slime growth
- Scratch and ultra-violet resistant external PE layer
- Can be installed by slip lining, pipe bursting, directional drilling or direct burial
- Zero joint infiltration, zero root penetration.

JOINTING

Sewertech can be joined by butt-fusion and electrofusion welding using standard PE jointing equipment and electrofusion fittings.

COMPATIBILITY

Sewertech is compatible with all standard PE sewer fittings and is suitable for use with a wide range of off the shelf couplings, 45° saddles and various angle bends. Property connections can be made easily using standard saddles or junctions.

PIPE SPECIFICATIONS

Nom Dia. DN (mm)	Mean Outside Diameter		Wall Thickness SDR21	
	Min.	Max	Min.	Max
160	160	161.5	7.7	8.6
180	180	181.7	8.6	9.6
250	250	252.3	11.9	13.2
315	315	317.9	15	16.6

THE RANGE



SEWERTECH FITTINGS



PE Adaptor &
PVC Socket and Cap



380mm Radius
Sweep Bend 45°



480mm Radius
Sweep Bend 90°



750mm Radius
Sweep Bend 15°



750mm Radius
Sweep Bend 30°



750mm Radius
Sweep Bend 45°



750mm Radius
Sweep Bend 90°





90° Sweep Junctions
Reducing



90° Sweep Junctions
Equal



45° Junctions
Reducing



45° Junctions
Equal

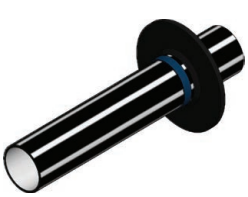

Spigot fitted with
Hydrophilic Seal



External 45° Backdrop
Junction with Seal



External 90° Backdrop
Junction with Seal



External Backdrop
Bend with Seal

PE ADAPTOR

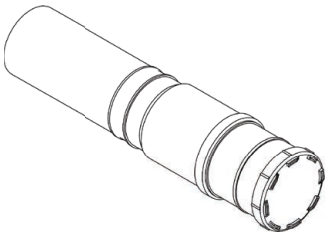

PE ADAPTOR & PVC SOCKET AND CAP

Code	PE Size (mm)	PVC Size (mm)	Price
PEADPVC110	110	100	135.30
PEADPVC160	160	150	144.70

SEWERTECH® SWEEP BENDS

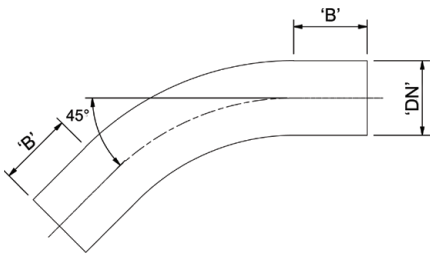

SEWERTECH® 380MM RADIUS SWEEP BENDS 45°

Code	Nom Dia. DN (mm)	Dim. (mm) 'B' (min.)	Price
STSW11045380R	110	110	167.60
STSW11030380R	110	110	163.90
STSW11090380R	110	110	171.50

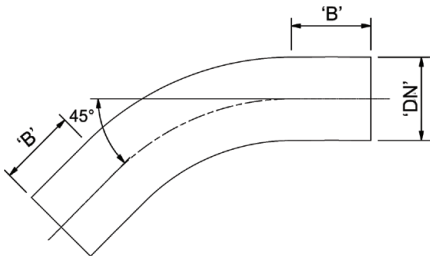

SEWERTECH® 480MM RADIUS SWEEP BENDS 45°

Code	Nom Dia. DN (mm)	Dim. (mm) 'B' (min.)	Price
STSW16045480R	160	160	185.00
STSW16090480R	160	160	208.70

SEWERTECH® SWEEP BENDS

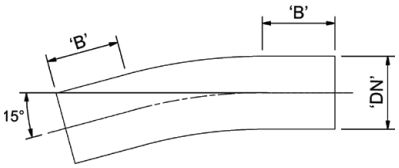

SEWERTECH® 750MM RADIUS SWEEP BENDS 15°

Code	Nom Dia. DN (mm)	Dim. (mm) 'B' (min.)	Price
STSW11015750R	110	110	118.30
STSW16015750R	160	160	194.50

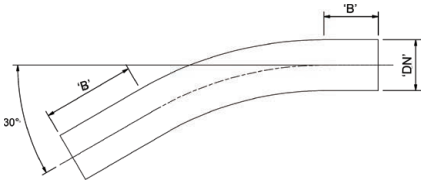

SEWERTECH® 750MM RADIUS SWEEP BENDS 30°

Code	Nom Dia. DN (mm)	Dim. (mm) 'B' (min.)	Price
STSW11030750R	110	110	124.40
STSW16030750R	160	160	202.00

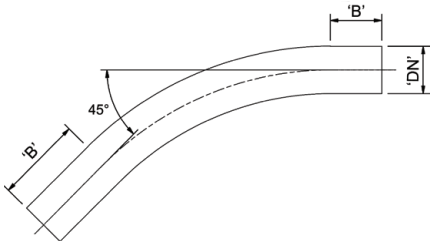

SEWERTECH® 750MM RADIUS SWEEP BENDS 45°

Code	Nom Dia. DN (mm)	Dim. (mm) 'B' (min.)	Price
STSW11045750R	110	110	159.90
STSW16045750R	160	160	209.00

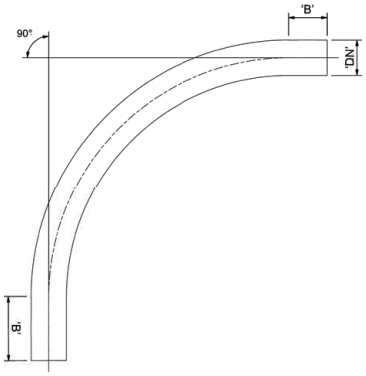

SEWERTECH® 750MM RADIUS SWEEP BENDS 90°

Code	Nom Dia. DN (mm)	Dim. (mm) 'B' (min.)	Price
STSW11090750R	110	110	179.30
STSW16090750R	160	160	237.40

SEWERTECH® JUNCTIONS

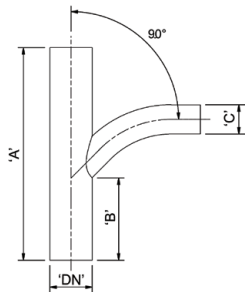

SEWERTECH® 90° SWEEP JUNCTIONS REDUCING

Code	Nom Dia. DN (mm)	Dim. (mm) 'A'	Dim. (mm) 'B'	Dim. (mm) 'C'	Price
STSJR16011090	160	600	310	110	375.50
STSJR25011090	250	800	310	110	434.40
STSJR25016090	250	800	310	160	451.90

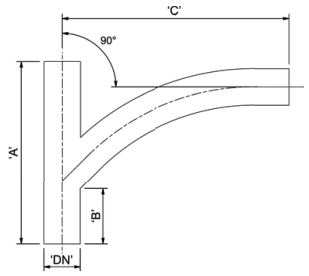

SEWERTECH® 90° SWEEP JUNCTIONS EQUAL

Code	Nom Dia. DN (mm)	Dim. (mm) 'A'	Dim. (mm) 'B'	Dim. (mm) 'C'	Price
STSJE11090	110	540	252	455	348.70
STSJE16090	160	800	242	1000	463.00

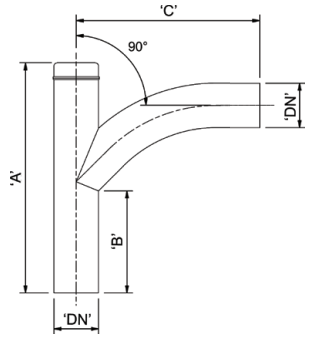

SEWERTECH® 90° SWEEP JUNCTIONS EQUAL C/W LOW PRESSURE END CAP BUTT WELDED

Code	Nom Dia. DN (mm)	Dim. (mm) 'A'	Dim. (mm) 'B'	Dim. (mm) 'C'	Price
STSJE11090CAP	110	569	252	455	428.90

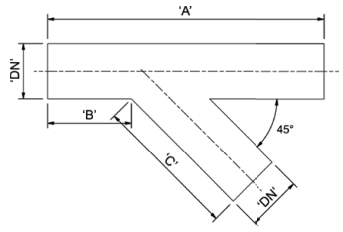

SEWERTECH® 45° JUNCTIONS EQUAL

Code	Nom Dia. DN (mm)	Dim. (mm) 'A'	Dim. (mm) 'B'	Dim. (mm) 'C'	Price
STJE11045	110	800	252	425	206.00
STJE16045	160	800	242	450	234.50

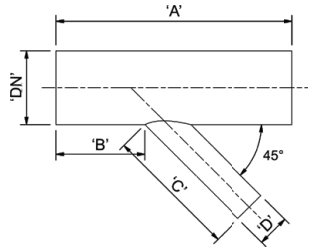

SEWERTECH® 45° JUNCTIONS REDUCING

Code	Nom Dia. DN (mm)	Dim. (mm) 'A'	Dim. (mm) 'B'	Dim. (mm) 'C'	Dim. (mm) 'D'	Price
STJR16011045	160	800	275	440	110	223.10
STJR25011045	250	800	360	450	110	366.10
STJR25016045	250	800	360	550	160	428.90

PUDDLE FLANGE

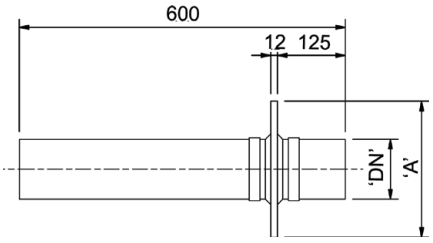

PUDDLE FLANGE MH SPIGOT

Code	Nom Dia. DN (mm)	Dim. (mm) 'A'	Price
PF110MHS250	110	250	181.20
PF160MHS300	160	300	238.20
PF250MHS390	250	390	415.30
PF315MHS455	315	455	568.00

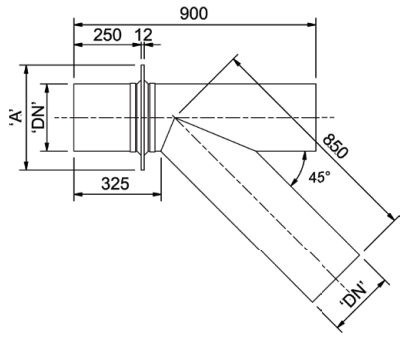

PUDDLE FLANGE EXTERNAL 45° BACKDROP JUNCTION

Code	Nom Dia. DN (mm)	Dim. (mm) 'A'	Price
PF160BJ45	160	300	466.90
PF250BJ45	250	390	1,252.10

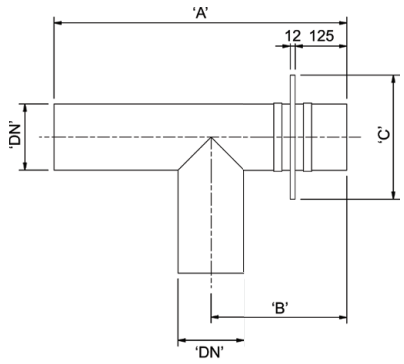

PUDDLE FLANGE EXTERNAL 90° BACKDROP JUNCTION

Code	Nom Dia. DN (mm)	Dim. (mm) 'A'	Dim. (mm) 'B'	Dim. (mm) 'C'	Price
PF110BJ90	110	685	305	250	190.60
PF160BJ90	160	710	330	300	358.40
PF250BJ90	250	780	470	390	832.80
PF315BJ90	315	938	580	455	1,052.00

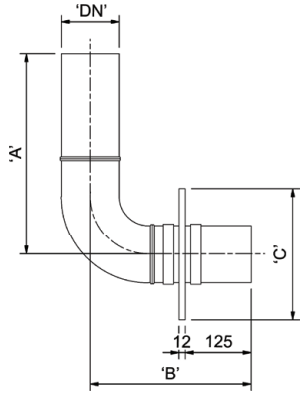

PUDDLE FLANGE BACKDROP BEND

Code	Nom Dia. DN (mm)	Dim. (mm) 'A'	Dim. (mm) 'B'	Dim. (mm) 'C'	Price
PF110BB90	110	380	305	250	354.50
PF160BB90	160	380	330	300	533.60
PF250BB90	250	570	470	390	1,444.40
PF315BB90	315	580	580	455	2,435.40



StormPRO

StormPRO pipes have a simple and effective rubber ring joint system which is easy to assemble, leak tight and protects against tree root intrusion. The rubber ring is located on the spigot in the last trough between the corrugations.

Vinidex PRO2 is a new jointing system designed for easier installation and leak tight joint performance. The PRO2 joint design uses a new redesigned rubber ring to match new socket geometry. Ensure that only PRO2 rubber rings are used with PRO2 sockets. PRO2 sockets can be identified by a label on the socket and PRO2 rubber rings can be identified by PRO2 marking on the ring.

BENEFITS

- Wide range of fittings available including Tees, Bends and Junctions.
- StormPRO® pipes are twin-wall, corrugated polypropylene pipes for non-pressure applications.
- Manufactured with a smooth bore for optimum hydraulic performance and a corrugated outside wall for high stiffness to weight ratio.
- Latest generation PRO2 Joints.
- Light weight.

THE RANGE



PRO Coupling



PRO Slip Coupling



PRO Push on Cap



PRO Bend 22.5°



PRO Bend 30°



PRO Bend 45°



PRO Bend 88°



PRO Equal Tee



PRO Reducing Tee



PRO Equal Junction 45°



PRO Equal Junction 88°



PRO Step Down Junction 45°



PRO Step Down Junction 88°

PRO COUPLINGS & CAPS



PRO COUPLING POLYPROPYLENE

Code	Size (mm)	Spigot	Price
SWPC450	450	FF	1,762.60
SWPC525	525	FF	2,267.70
SWPC600	600	FF	2,875.90



PRO SLIP COUPLING POLYPROPYLENE

Code	Size (mm)	Spigot	Price
PROSC450	450	FF	2,000.00
PROSC525	525	FF	2,393.00
PROSC600	600	FF	3,491.20
PROSC750*	750	-	5,146.70
PROSC900*	900	-	6,358.50

* Minimum order quantity is 3



PRO PUSH ON CAP POLYPROPYLENE

Code	Size (mm)	Spigot	Price
SWPPOC450F	450	F	1,441.30
SWPPOC525F	525	F	1,788.20
SWPPOC600F	600	F	2,381.30
SWPPOC750F	750	F	3,208.80
SWPPOC900F	900	F	5,219.50

PRO BENDS



PRO BEND 22.5° POLYPROPYLENE

Code	Size (mm)	Spigot	SN	Price
SWPB45022.5MF	450	MF	10	1,139.10
SWPB52522.5MF	525	MF	10	1,225.20
SWPB60022.5MF	600	MF	10	2,023.40
SWPB75022.5MF	750	MF	10	3,070.20
SWPB90022.5MF	900	MF	10	3,968.00



PRO BEND 30° POLYPROPYLENE

Code	Size (mm)	Spigot	SN	Price
SWPB45030MF	450	MF	10	1,345.80
SWPB60030MF	600	MF	10	2,376.90



PRO BEND 45° POLYPROPYLENE

Code	Size (mm)	Spigot	SN	Price
SWPB45045MF	450	MF	10	1,567.10
SWPB52545MF	525	MF	10	2,046.80
SWPB60045MF	600	MF	10	2,947.60
SWPB75045MF	750	MF	10	4,873.80
SWPB90045MF	900	MF	10	5,359.80



PRO BEND 88° POLYPROPYLENE

Code	Size (mm)	Spigot	SN	Price
SWPB45088MF	450	MF	10	1,965.80
SWPB52588MF	525	MF	10	2,165.80
SWPB60088MF	600	MF	10	2,471.00
SWPB75088MF	750	MF	10	4,377.50
SWPB90088MF	900	MF	10	5,899.70

PRO TEES



PRO EQUAL TEE POLYPROPYLENE

Code	Size (mm)	Spigot	SN	Price
SWPET450MFF	450	MFF	10	3,928.40
SWPET525MFF	525	MFF	10	3,986.00
SWPET600MFF	600	MFF	10	4,060.90
SWPET750MFF	750	MFF	10	9,433.60
SWPET900MFF	900	MFF	10	11,850.80



PRO REDUCING TEE POLYPROPYLENE

Code	Size (mm)	Size (mm)	Spigot	SN	Price
SWPRT450150MFF	450	150	MF	10	2,479.50
SWPRT450225MFF	450	225	MF	10	2,740.50
SWPRT450300MFF	450	300	MF	10	2,903.70
SWPRT450375MFF	450	375	MF	10	3,019.90



PRO JUNCTIONS



PRO EQUAL JUNCTION 45° POLYPROPYLENE

Code	Size (mm)	Spigot	SN	Price
SWPEJ45045MFF	450	MFF	10	3,908.90
SWPEJ52545MFF	525	MFF	10	3,611.40
SWPEJ60045MFF	600	MFF	10	5,558.80
SWPEJ75045MFF	750	MFF	10	8,457.50
SWPEJ90045MFF	900	MFF	10	14,003.60



PRO EQUAL JUNCTION 88° POLYPROPYLENE

Code	Size (mm)	Spigot	SN	Price
SWPEJ45088MFF	450	MFF	10	4,165.00
SWPEJ52588MFF	525	MFF	10	4,329.80
SWPEJ60088MFF	600	MFF	10	6,178.90
SWPEJ75088MFF	750	MFF	10	10,857.20



PRO STEP DOWN JUNCTION 45° POLYPROPYLENE

Code	Size (mm)	Size (mm)	Spigot	SN	Price
SWPSDJ45015045MFF	450	150	MF	10	P.O.A
SWPSDJ45022545MF	450	225	MF	10	P.O.A
SWPSDJ45030045MFF	450	300	MF	10	P.O.A
SWPSDJ45037545MF	450	375	MF	10	P.O.A



PRO STEP DOWN JUNCTION 88° POLYPROPYLENE

Code	Size (mm)	Size (mm)	Spigot	SN	Price
SWPSDJ45015088MFF	450	150	MF	10	P.O.A
SWPSDJ45022588MF	450	225	MF	10	P.O.A
SWPSDJ45030088MF	450	300	MF	10	P.O.A
SWPSDJ45037588MFF	450	375	MF	10	P.O.A

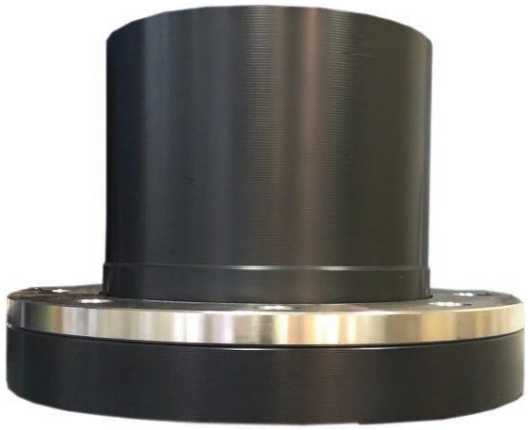

THE MAXI EFFECT

The MaxiStub is a full-faced Polyethylene (PE) flange system designed with a true nominal bore. It was created to allow PE pipe flange sizes to closely align with other piping materials at higher PN ratings. First developed for municipal PN16 applications, the MaxiStub is now standard across Rodney Industries' Poly Footvalves, Leaf and Lint Strainers, and is increasingly used on Suction Lines to address critical bore-size and flow-velocity requirements.

BENEFITS

- Full nominal bore at high pressure ratings on any flange size.
- No spacers required for butterfly valve function.
- Full sealing face with full backing flange support.
- No deformation of stubs or backing rings.
- Backing rings captive by welds.
- Standard pressure rating of PN16/SDR11 up to 375mm available; others available on request.
- Suitable for buttwelding or electrofusion.

THE DIFFERENCE

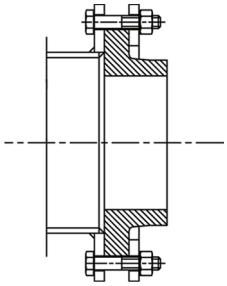

CONVENTIONAL POLY STUB FLANGE

Steel Flange to Conventional Poly Stub Flange and Backing Ring (Table D)

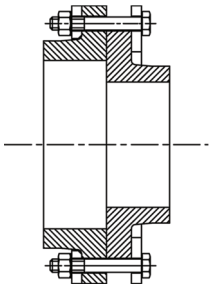

MAXI STUB FLANGE & BACKING RING

MaxiStub Flange & Backing Ring to Conventional Poly Stub Flange & Backing Ring (Table D)

MAXI STUB GUIDE

Flange vs Nominal Bore Size		Polyethylene Pipe Sizes to suit MAXI Stub	Standard Reference of Typical Pipes ie. PVC S1&S2, Steel, Ductile
inch	mm		
3"	80	90 / 110	80
4"	100	125 / 140	100
5"	125	140 / 160	125
6"	150	180 / 200	150
8"	200	225 / 250	200
9"	225	250 / 280	225
10"	250	280 / 315	250
12"	300	355	300



MAXI STUBS

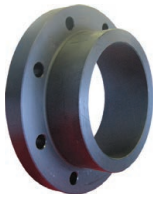

NOTE:
Standard Maxi Stub - SDR 11 PE100 drilled to suit Table D backing ring.
Other sizes available upon application.

Maxi Stub Short Spigot

Size				Code	Price
Pipe ø	inches	mm	OD		
125	4	100	215	MX412511D	36.80
160	5	125	225	MX516011D	51.70
180	6	150	280	MX618011D	59.80
200	6	150	280	MX620011D	165.20
225	8	200	335	MX822511D	427.70
250	8	200	335	MX825011D	126.30
280	9	225	370	MX928011D	245.50
280	10	250	405	MX1028011D	173.80
315	10	250	405	MX1031511D	230.70
355	12	300	455	MX1235511D	286.70



Maxi Stub Long Spigot Suitable for Electrofusion or Buttwelding

Size				Code	Price
Pipe Ø	inches	mm	OD		
125	4	100	215	MX412511DEF	52.80
180	6	150	280	MX618011DEF	76.90
250	8	200	335	MX825011DEF	133.10
315	10	250	405	MX1031511DEF	257.60
355	12	300	455	MX1235511DEF	315.40



Backing Ring to Suit Maxi Stub

Size			Code	Price
Backing Ring	To Suit Maxi	Pipe		
mm	inches	mm		
100	4	125	BRX4140D	57.40
125	5	160	BRX5160D	92.30
150	6	200	BRX6200D	24.10
200	8	250	BRX8250D	47.10
225	9	280	BRX9280D	119.40
250	10	315	BRX10315D	54.00
300	12	355	BRX12355D	140.00



Maxi Stub Assembly complete with Stainless Steel 316 Backing Ring

Size				Code	Price
Pipe Ø	inches	mm	OD		
125	4	100	215	MX412511EFASSY	125.70
180	6	150	280	MX618011EFASSY	194.40
200	6	150	280	MX620011EFASSY	373.60
225	8	200	335	MX822511EFASSY	682.40
250	8	200	335	MX825011EFASSY	305.10
280	9	225	370	MX928011EFASSY	482.60
315	10	250	405	MX1031511EFASSY	471.90
355	12	300	455	MX1235511EFASSY	582.90



DUCTILE IRON PIPE

PRECISION-MADE PIPEWORK

Rodney Industries supplies a selection of Ductile Iron Pipe to suit a variety of project requirements. Pipe lengths can be manufactured to order, with DN100, DN150 and DN200 sizes available. Each pipe features a durable bitumen coating for long-term corrosion protection and is produced to AS4087 PN16 flange specifications.







Built for fast filling. Designed for demanding environments.



TRUCK FILL STANDPIPES

Rodney Industries Truck Fill Standpipes deliver robust and reliable water cart filling performance. Available in multiple diameters and manufactured from heavy-duty galvanised steel for long service life in mining, irrigation, civil and industrial applications.







TRUCK FILL STANDPIPES

Rodney Industries Truck Fill Standpipes are purpose-built to provide a safe, efficient and reliable filling point for water carts, road tankers and service vehicles.

Manufactured from heavy-duty hot dip galvanised steel, each standpipe is designed to withstand harsh operating conditions while delivering consistent performance. The elevated fill point allows operators to quickly load vehicles while maintaining convenient access and reducing handling requirements.

Available in a range of diameters from 100mm through to 300mm, Rodney Industries Truck Fill Standpipes can be selected to suit a variety of flow requirements and site configurations.



BENEFITS

- Heavy-duty galvanised steel construction
- Available in 100mm, 150mm, 200mm, 250mm and 300mm
- 5 metre standpipe height
- Supplied complete with flange to hose tail connection
- Includes gaskets, nuts and bolts
- Designed for rapid tanker and water cart filling
- Suitable for mining, civil, irrigation and industrial applications
- Manufactured by Rodney Industries

Truck Fill Standpipes

Size (mm)	Height (Mtr)	Base Size (Mtr)	Code	Price
100	5	6.5 x 2	TFPS100	14,360.00
150	5	6.5 x 2	TFPS150	15,440.00
200	5	7.5 x 2.4	TFPS200	18,460.00
250	5	7.5 x 2.4	TFPS250	20,300.00
300	5	7.5 x 2.4	TFPS300	23,860.00





Rodney Industries

Phone: 07 3624 0300
Email: sales@rodneyind.com.au
Web: www.rodneyind.com.au