Rodney Industries

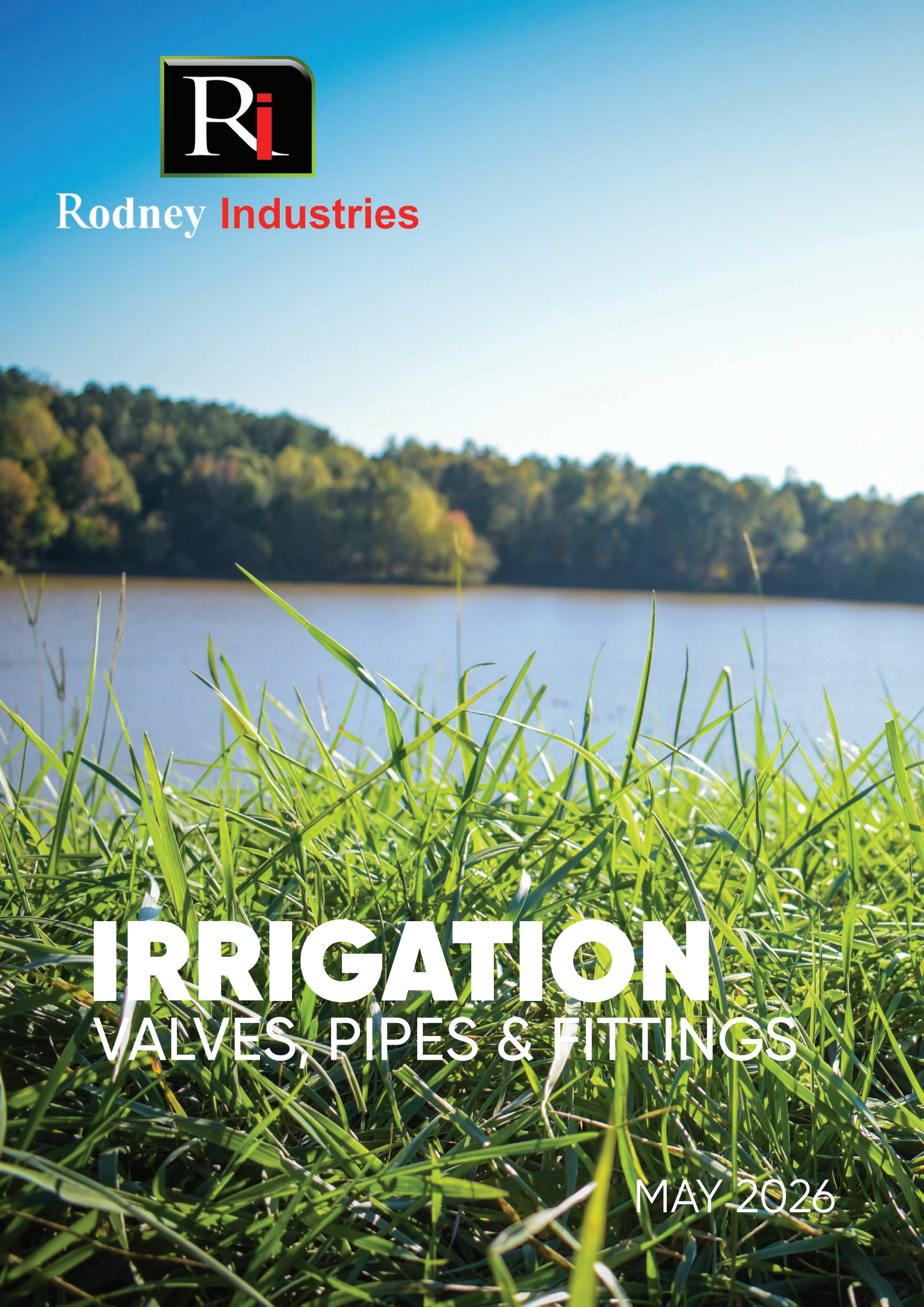

# IRRIGATION

## VALVES, PIPES & FITTINGS

MAY 2026

# TABLE OF CONTENTS























# TABLE OF CONTENTS


| | |
|---|---|
| Footvalves | Page 02 |
| Eco Check Valves | Page 06 |
| Gate Check Valves | Page 07 |
| Check Valves | Page 08 |
| Right Angle Discharge Valves | Page 08 |
| Eco Flap Valves | Page 09 |
| Gibault Joints | Page 09 |
| Stainers | Page 10 |
| Valve Spare Parts | Page 14 |
| Goosenecks | Page 18 |
| Flanged Pipe | Page 18 |
| Bends | Page 22 |
| Tees | Page 24 |
| Tapers | Page 25 |
| Flanged Support Brackets | Page 27 |
| Bore Caps | Page 27 |
| Flanges and Gaskets | Page 28 |
| Connectors | Page 29 |
| Hose Ends | Page 31 |
| Hose Joiners, Tails and Clamps | Page 32 |
| Aluminium Reducers | Page 33 |
| Aluminium Tees | Page 33 |
| Aluminium Crosses | Page 34 |
| Aluminium Bends | Page 35 |
| Aluminium Starts and Ends | Page 36 |
| Floats and Pontoons | Page 40 |
| Segmented Bends | Page 44 |
| Sweep Bends | Page 46 |
| Stub Flanges | Page 48 |
| Maxi Stubs | Page 49 |
| Valves Spacers | Page 50 |
| Shouldered Ends | Page 50 |
| Nuts, Bolts and Gasket Kits | Page 51 |
| Bends and Tees | Page 52 |
| Junctions | Page 53 |
| End Caps | Page 54 |
| Reducers | Page 55 |
| Backing RIngs | Page 57 |
| Joiners | Page 62 |
| Couplers | Page 62 |
| Flanged Fittings | Page 64 |
| Weld Bells | Page 65 |
| Clamps and Gaskets | Page 66 |
| Bauer Style Fittings | Page 67 |


RODNEY INDUSTRIES















# IRRIGATION
## VALVES AND STRAINERS

## RELIABLE, DURABLE, AND BUILT FOR DEMANDING ENVIRONMENTS.

With over 100 types and sizes available, our Valves and Strainers provide solutions for a wide range of applications — and if you need something custom, we can manufacture to suit.

Key Features:

- Extensive range of configurations
- Hot-dip galvanised for corrosion resistance
- Suitable for ocean outlets, transfer ponds, channels and more
- Sizes available to meet most requirements
- Spare parts readily available
- Custom options available

# FOOTVALVES





**Please note:**
Spring Loaded Code includes factory fitted spring.



### STANDARD GALVANISED (TABLE D)

| mm | Inches | Code | Price | Spring Load Code | Spring Load Price |
|---|---|---|---|---|---|
| 80 | 3 | 6515 | 601.10 | 6515SL | 678.70 |
| 100 | 4 | 6525 | 654.50 | 6525SL | 753.40 |
| 125 | 5 | 6535 | 754.50 | 6535SL | 805.00 |
| 150 | 6 | 6545 | 881.30 | 6545SL | 958.20 |
| 200 | 8 | 6565 | 1,209.60 | | |
| 250 | 10 | 6585 | 1,519.80 | | |
| 300 | 12 | 6595 | 2,187.10 | | |
| 350 | 14 | 6590 | 3,017.10 | | |
| 375 | 15 | 6605 | 4,566.60 | | |
| 400 | 16 | 6615 | 5,320.40 | | |
| 450 | 18 | 6625 | 5,937.40 | | |
| 500 | 20 | 6635 | 6,501.60 | | |
| 600 | 24 | 6645 | 8,433.50 | | |
| 660 | 26 | 6647 | 8,761.90 | | |
| 750 | 30 | 6650 | 14,256.90 | | |



### STAINLESS STEEL 316 (TABLE D)

| mm | Inches | Code | Price | Spring Load Code | Spring Load Price |
|---|---|---|---|---|---|
| 80 | 3 | 6515SS316 | 2,581.20 | 6515SS316SL | 2,631.00 |
| 100 | 4 | 6525SS316 | 1,182.80 | 6525SS316SL | 1,592.10 |
| 125 | 5 | 6535SS316 | 1,447.10 | 6535SS316SL | 1,478.90 |
| 150 | 6 | 6545SS316 | 1,722.80 | 6545SS316SL | 1,976.80 |
| 200 | 8 | 6565SS316 | P.O.A | | |
| 250 | 10 | 6585SS316 | 4,999.60 | | |
| 300 | 12 | 6595SS316 | P.O.A | | |
| 350 | 14 | 6590SS316 | 10,417.70 | | |
| 375 | 15 | 6605SS316 | 9,742.90 | | |
| 400 | 16 | 6615SS316 | 11,906.50 | | |
| 450 | 18 | 6625SS316 | 16,428.00 | | |
| 500 | 20 | 6635SS316 | P.O.A | | |
| 600 | 24 | 6645SS316 | 24,507.50 | | |

# FOOTVALVES

## Galvanised & Stainless Steel Technical Drawing

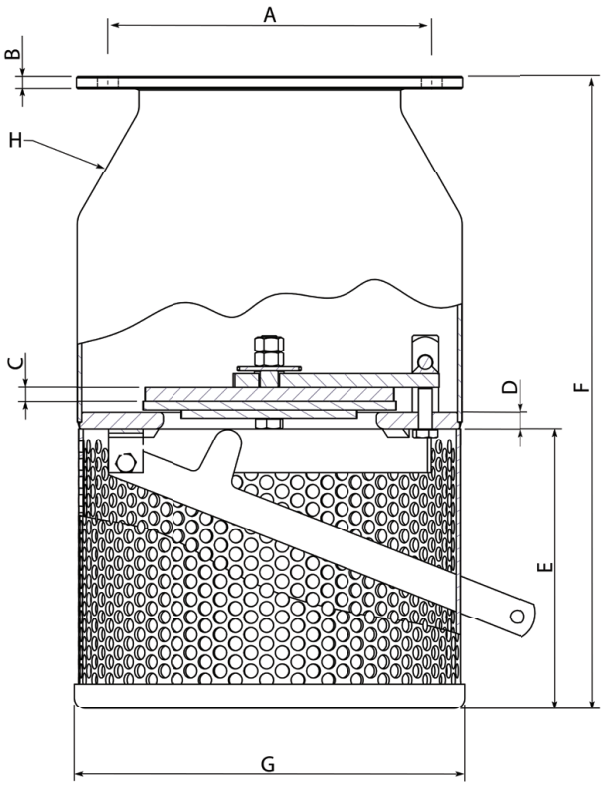


| Size mm | Size Inches | A mm | B mm | C mm | D mm | E mm | F mm | G mm | H mm | Weight Approx kgs |
|---|---|---|---|---|---|---|---|---|---|---|
| 80 | 3 | 146 | 10 | 10 | 12 | 178 | 372 | 188 | 3 | 10 |
| 100 | 4 | 178 | 10 | 10 | 12 | 178 | 393 | 220 | 3 | 11.7 |
| 125 | 5 | 210 | 10 | 10 | 12 | 203 | 448 | 258 | 3 | 16.2 |
| 150 | 6 | 235 | 10 | 10 | 12 | 203 | 459 | 283 | 3 | 18.5 |
| 175 | 7 | 260 | 10 | 10 | 12 | 230 | 500 | 310 | 2 | 20 |
| 200 | 8 | 292 | 12 | 12 | 16 | 278 | 595 | 340 | 3 | 30 |
| 250 | 10 | 356 | 12 | 12 | 16 | 312 | 676 | 405 | 3 | 42 |
| 300 | 12 | 406 | 12 | 12 | 16 | 364 | 776 | 455 | 3 | 53 |
| 350 | 14 | 470 | 16 | 16 | 20 | 408 | 897 | 525 | 3 | 82.5 |
| 375 | 15 | 495 | 16 | 16 | 20 | 432 | 920 | 550 | 2 | 86.5 |
| 400 | 16 | 521 | 16 | 16 | 20 | 470 | 975 | 585 | 2 | 98.4 |
| 450 | 18 | 584 | 20 | 20 | 25 | 505 | 1105 | 645 | 3 | 139 |
| 500 | 20 | 641 | 20 | 20 | 25 | 555 | 1180 | 710 | 3 | 178 |
| 600 | 24 | 756 | 20 | 20 | 25 | 665 | 1390 | 830 | 3 | 246 |
| 660 | 26 | 813 | 20 | 20 | 25 | 725 | 1510 | 875 | 3 | 280 |
| 750 | 30 | 927 | 25 | 20 | 32 | 820 | 1660 | 995 | 6 | 500 |

# FOOTVALVES



**POLY HOUSING G-10 GLASS RESIN & 316 STAINLESS STEEL**

| Size | | Code | Price | Spring Loaded Code | Spring Loaded Price |
|---|---|---|---|---|---|
| mm | inches | | | | |
| 100 | 4 | FVPS100 | 2,937.80 | FVPS100SL | P.O.A |
| 125 | 5 | FVPS125 | 3,468.10 | FVPS125SL | P.O.A |
| 150 | 6 | FVPS150 | 3,740.00 | FVPS150SL | P.O.A |
| 200 | 8 | FVPS200 | 5,162.00 | | |
| 250 | 10 | FVPS250 | 6,729.20 | | |
| 300 | 12 | FVPS300 | 7,701.30 | | |



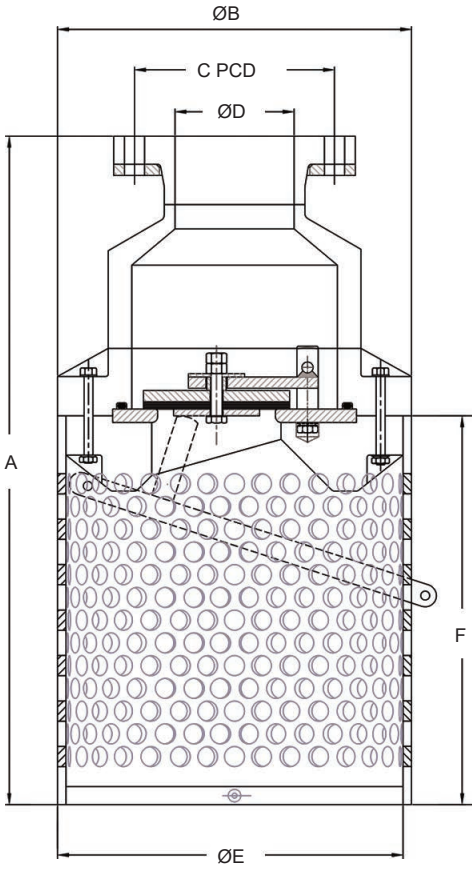


## Polyethylene Technical Drawing

| Footvalve | General Dimensions | | | | | |
|---|---|---|---|---|---|---|
| | A | ØB | C PCD | ØD | ØE | F |
| FVPS100 | 590 | 300 | 178 (4") | 106 | 300 | 345 |
| FVPS125 | 700 | 350 | 210 (5") | 130 | 350 | 370 |
| FVPS150 | 700 | 350 | 235 (6") | 162 | 350 | 370 |
| FVPS200 | 820 | 440 | 292 (8") | 203 | 440 | 450 |
| FVPS250 | 950 | 545 | 356 (10") | 255 | 545 | 550 |
| FVPS300 | 950 | 600 | 406 (12") | 302 | 600 | 565 |

# FOOTVALVES




**SQUAT STYLE FOOTVALVES (TABLE D)**

| mm | Inches | DIA (mm) | Screen Height (mm) | Code | Price |
|---|---|---|---|---|---|
| 100 | 4 | 600 | 155 | 6525SQ600 | 1,450.80 |
| 100 | 4 | 900 | 155 | 6525SQ900 | 1,550.40 |
| 125 | 5 | 600 | 170 | 6535SQ600 | 1,504.50 |
| 125 | 5 | 900 | 170 | 6535SQ900 | 1,641.90 |
| 150 | 6 | 600 | 170 | 6545SQ600 | 1,687.80 |
| 150 | 6 | 900 | 170 | 6545SQ900 | 1,825.30 |
| 200 | 8 | 600 | 170 | 6565SQ600 | 1,878.60 |
| 200 | 8 | 900 | 170 | 6565SQ900 | 2,015.90 |
| 200 | 8 | 1200 | 170 | 6565SQ1200 | 2,252.80 |
| 250 | 10 | 900 | 170 | 6585SQ900 | 2,420.80 |
| 250 | 10 | 1200 | 170 | 6585SQ1200 | 2,848.40 |
| 300 | 12 | 900 | 170 | 6595SQ900 | 2,649.90 |
| 300 | 12 | 1200 | 170 | 6595SQ1200 | 3,130.90 |

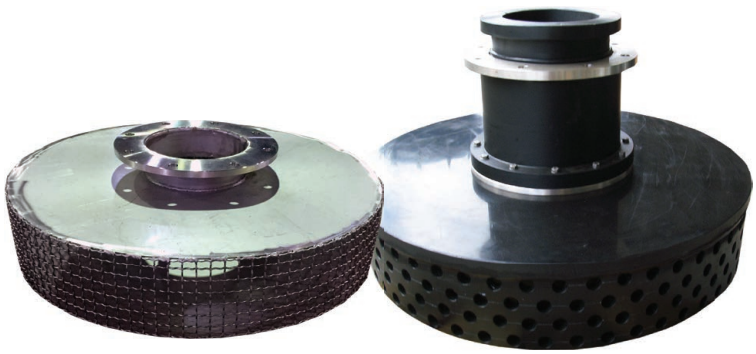

Also available in Stainless Steel and Polyethylene. Contact our sales office for further details.

# ECO CHECK VALVES









**STANDARD (TABLE D)**

| mm | Inches | Code | Price |
|---|---|---|---|
| 80 | 3 | 6360 | 1,421.70 |
| 100 | 4 | 6370 | 1,817.50 |
| 125 | 5 | 6380 | 2,276.60 |
| 150 | 6 | 6390 | 2,280.90 |
| 200 | 8 | 6410 | 3,007.20 |
| 250 | 10 | 6420 | 5,028.00 |
| 300 | 12 | 6430 | 5,184.30 |
| 350 | 14 | 6440 | 8,026.10 |
| 375 | 15 | 6450 | 8,391.10 |
| 400 | 16 | 6460 | 8,626.80 |
| 450 | 18 | 6470 | 9,259.10 |
| 500 | 20 | 6480 | 10,596.20 |
| 600 | 24 | 6490 | 12,700.10 |
| 660 | 26 | 6500 | 13,781.00 |
| 660/750 | 26/30 | 6502 | 14,306.80 |
| 660/900 | 26/36 | 6504 | 15,128.60 |

**WITH BYPASS (TABLE D)**

| mm | Inches | Bypass Size | Code | Price |
|---|---|---|---|---|
| 80 | 3 | 20 copper | 6360BP | 1,828.60 |
| 100 | 4 | 20 copper | 6370BP | 2,319.00 |
| 125 | 5 | 20 copper | 6380BP | 2,778.10 |
| 150 | 6 | 20 copper | 6390BP | 2,688.40 |
| 200 | 8 | 20 copper | 6410BP | 3,523.40 |
| 250 | 10 | 32 gal | 6420BP | 5,495.70 |
| 300 | 12 | 32 gal | 6430BP | 5,652.90 |
| 350 | 14 | 40 gal | 6440BP | 8,891.80 |
| 375 | 15 | 40 gal | 6450BP | 9,259.10 |
| 400 | 16 | 50 gal | 6460BP | 9,428.60 |
| 450 | 18 | 50 gal | 6470BP | 10,126.40 |
| 500 | 20 | 60 gal | 6480BP | 11,690.30 |
| 600 | 24 | 60 gal | 6490BP | 14,176.60 |
| 660 | 26 | 80 gal | 6500BP | 15,310.50 |
| 660/750 | 26/30 | 80 gal | 6502BP | 15,834.90 |
| 660/900 | 26/36 | 80 gal | 6504BP | 16,657.20 |

Valve complete with inspection hatch
Please let sales department know when ordering if you require the hatch. (For sizes 14" and up).

# GATE CHECK VALVES



STANDARD (TABLE D)

| mm | Inches | Code | Price |
|---|---|---|---|
| 80 | 3 | 6815 | 1,886.50 |
| 100 | 4 | 6825 | 2,045.10 |
| 125 | 5 | 6835 | 2,333.90 |
| 150 | 6 | 6845 | 2,484.50 |
| 200 | 8 | 6865 | 3,142.30 |
| 250 | 10 | 6885 | 4,969.90 |
| 300 | 12 | 6895 | 6,139.10 |
| 350 | 14 | 6905 | 7,981.50 |
| 400 | 16 | 6925 | 8,801.00 |
| 450 | 18 | 6935 | 11,681.20 |
| 500 | 20 | 6945 | 13,190.90 |
| 600 | 24 | 6955 | 15,242.00 |
| 660 | 26 | 6960 | 18,660.90 |
| 750 | 30 | 6965 | 20,767.70 |
| 660/750 | 26/30 | 6502 | 14,306.80 |
| 660/900 | 26/36 | 6504 | 15,128.60 |



WITH BYPASS (TABLE D)

| mm | Inches | Bypass Size | Code | Price |
|---|---|---|---|---|
| 80 | 3 | 20 copper | 6815BP | 2,256.70 |
| 100 | 4 | 20 copper | 6825BP | 2,444.60 |
| 125 | 5 | 20 copper | 6835BP | 2,795.70 |
| 150 | 6 | 20 copper | 6845BP | 2,930.20 |
| 200 | 8 | 20 copper | 6865BP | 3,580.80 |
| 250 | 10 | 32 gal | 6885BP | 5,344.50 |
| 300 | 12 | 32 gal | 6895BP | 6,908.70 |
| 350 | 14 | 40 gal | 6905BP | 8,967.70 |
| 400 | 16 | 50 gal | 6925BP | 9,147.60 |
| 450 | 18 | 50 gal | 6935BP | 11,946.20 |
| 500 | 20 | 65 gal | 6945BP | 14,730.80 |
| 600 | 24 | 65 gal | 6955BP | 16,868.50 |
| 660 | 26 | 80 gal | 6960BP | 19,492.90 |
| 750 | 30 | 80 gal | 6965BP | 21,438.20 |
| 660/750 | 26/30 | 80 gal | 6502BP | 15,834.90 |
| 660/900 | 26/36 | 80 gal | 6504BP | 16,657.20 |

# CHECK VALVES



STANDARD (TABLE D)

| mm | Inches | Code | Price |
|---|---|---|---|
| 80 | 3 | 6655 | 1,455.50 |
| 100 | 4 | 6665 | 1,580.40 |
| 125 | 5 | 6675 | 1,838.20 |
| 150 | 6 | 6685 | 1,897.60 |
| 200 | 8 | 6705 | 2,747.20 |
| 250 | 10 | 6725 | 4,475.80 |
| 300 | 12 | 6735 | 5,609.80 |
| 350 | 14 | 6745 | 7,405.80 |
| 375 | 15 | 6755 | 7,577.80 |
| 400 | 16 | 6765 | 8,197.50 |
| 450 | 18 | 6775 | 9,607.30 |
| 500 | 20 | 6785 | 11,185.50 |
| 600 | 24 | 6795 | 13,307.70 |
| 660 | 26 | 6797 | 16,390.30 |
| 750 | 30 | 6805 | 18,739.60 |



WITH BYPASS (TABLE D)

| mm | Inches | Bypass Size | Code | Price |
|---|---|---|---|---|
| 80 | 3 | 20 copper | 6655BP | 1,825.70 |
| 100 | 4 | 20 copper | 6665BP | 1,977.50 |
| 125 | 5 | 20 copper | 6675BP | 2,294.80 |
| 150 | 6 | 20 copper | 6685BP | 2,324.10 |
| 200 | 8 | 20 copper | 6705BP | 3,190.20 |
| 250 | 10 | 32 gal | 6725BP | 4,856.20 |
| 300 | 12 | 32 gal | 6735BP | 6,379.30 |
| 350 | 14 | 40 gal | 6745BP | 8,391.40 |
| 375 | 15 | 40 gal | 6755BP | 8,568.30 |
| 400 | 16 | 50 gal | 6765BP | 9,142.60 |
| 450 | 18 | 50 gal | 6775BP | 10,546.60 |
| 500 | 20 | 65 gal | 6785BP | 12,510.10 |
| 600 | 24 | 65 gal | 6795BP | 15,145.70 |
| 660 | 26 | 80 gal | 6797BP | 18,345.20 |
| 750 | 30 | 80 gal | 6805BP | 19,412.90 |

# RAD VALVES



RIGHT ANGLE DISCHARG FAVLE (TABLE D)

| Inlet | | Outlet | | Code | Price |
|---|---|---|---|---|---|
| mm | Inches | mm | Inches | | |
| 50&65 | 2&2½ | 100&125 | 4&5 | R22545 | 2,352.50 |
| 50&65 | 2&2½ | 125&150 | 5&6 | R22556 | 2,766.20 |
| 65&80 | 2½&3 | 100&125 | 4&5 | R25345 | 4,213.00 |
| 80&100 | 3&4 | 125&150 | 5&6 | R3456 | 4,283.20 |
| 125&150 | 5&6 | 200 | 8 | R568 | 4,544.70 |

# ECO FLAP VALVES



### STANDARD ECO FLAP VALVE (TABLE D)

| mm | Inches | Code | Price |
|---|---|---|---|
| 350 | 14 | ECO3303 | 4,117.60 |
| 400 | 16 | ECO3307 | 4,284.20 |
| 450 | 18 | ECO3312 | 4,806.80 |
| 500 | 20 | ECO3315 | 5,127.90 |
| 600 | 24 | ECO3322 | 6,338.50 |
| 660 | 26 | ECO3323 | 6,880.80 |
| 750 | 30 | ECO3325 | 8,789.00 |
| 800 | 32 | ECO3330 | 10,307.90 |
| 900 | 36 | ECO3335 | 12,366.40 |

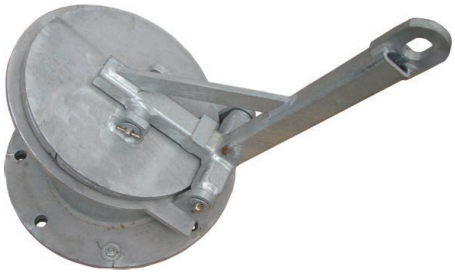

### HEAVY DUTY FLANGED (TABLE D)

| mm | Inches | Code | Price |
|---|---|---|---|
| 80 | 3 | 3267F | 769.10 |
| 100 | 4 | 3275F | 793.30 |
| 125 | 5 | 3277F | 1,070.30 |
| 150 | 6 | 3285F | 1,073.30 |
| 200 | 8 | 3287F | 2,245.60 |
| 250 | 10 | 3295F | 3,804.00 |
| 300 | 12 | 3297F | 4,185.10 |
| 350 | 14 | 3303F | 5,368.40 |
| 375 | 15 | 3305F | 6,589.00 |
| 400 | 16 | 3307F | 5,681.50 |
| 450 | 18 | 3312F | 6,286.90 |
| 500 | 20 | 3315F | 7,570.50 |
| 600 | 24 | 3322F | 8,352.00 |
| 750 | 30 | 3325F | 12,363.50 |

# GIBAULT JOINTS

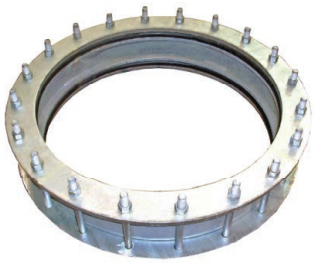

### GIBAULT JOINT

| mm | to suit OD | Code | Price |
|---|---|---|---|
| 300 | 324 | GJ300 | 1,486.70 |
| 400 | 407 | GJ400 | 2,331.00 |
| 500 | 508 | GJ500 | 2,635.30 |
| 600 | 640 | GJ600 | 2,869.90 |
| 660 | 660 | GJ660 | 2,942.50 |
| 750 | 762 | GJ750 | 5,324.60 |
| 900 | 914 | GJ900 | 7,138.40 |
| 1200 | 1219 | GJ1200 | 12,500.60 |
| 1500 | 1520 | GJ1500 | 15,626.60 |

# STRAINERS





### SUCTION STRAINER (PERFORATED SHEET)

| Size | | | | | | | |
|---|---|---|---|---|---|---|---|
| mm | Inches | Mesh size | Open area | Dia. | H | Code | Price |
| 50 | 2 | 6.35x8.89 | 46% | 90 | 200 | 7450 | 237.30 |
| 50 | 2 | 6.35x8.89 | 46% | 175 | 120 | 7452 | 267.80 |
| 80 | 3 | 9.53x14.47 | 40% | 200 | 400 | 7454 | 407.90 |



### HOSE TAIL STRAINER

| mm | Inches | mesh | Code | Price |
|---|---|---|---|---|
| 50 | 2 | Punched | 7265 | 256.70 |
| 80 | 3 | Punched | 7285 | 290.90 |
| 100 | 4 | Punched | 7295 | 298.90 |
| 125 | 5 | Punched | 7305 | 319.80 |
| 150 | 6 | Punched | 7315 | 366.50 |
| 200 | 8 | Punched | 7325 | 431.00 |



### FLANGED STRAINER (TABLE D)

| mm | Inches | mesh | Code | Price |
|---|---|---|---|---|
| 80 | 3 | Punched | 7345 | 285.60 |
| 100 | 4 | Punched | 7355 | 310.20 |
| 125 | 5 | Punched | 7365 | 322.70 |
| 150 | 6 | Punched | 7375 | 413.90 |
| 200 | 8 | Punched | 7395 | 458.30 |
| 250 | 10 | Weldmesh | 7415 | 1,525.00 |
| 300 | 12 | Weldmesh | 7425 | 1,539.10 |
| 350 | 14 | Weldmesh | 7435 | 1,813.40 |



### LEAF AND LINT STRAINERS (TABLE D)

| mm | Inches | Code | Price |
|---|---|---|---|
| 80 | 3 | 7505 | 5,000.70 |
| 100 | 4 | 7515 | 5,292.90 |
| 125 | 5 | 7525 | 5,392.30 |
| 150 | 6 | 7535 | 5,972.00 |
| 200 | 8 | 7545 | 6,868.20 |

**PLEASE NOTE: OUR RANGE OF LEAF & LINT SUCTION STRAINERS ARE NOT PRESSURE RATED.**

# POLYETHYLENE LEAF & LINT STRAINER

## At Rodney Industries, we know that quality, durability, and performance matter. That's why our Leaf and Lint Suction Strainers are built to deliver years of dependable, low-maintenance service.

To ensure long-term durability and reliable performance, our Leaf and Lint Strainers are fitted with high quality Stainless Steel 316 mesh baskets — a superior alternative to galvanized options.

**FEATURES INCLUDE:**

- Flow rates from 10 to 150 litres per second
- Corrosion-resistant polyethylene body for lightweight strength
- Galvanized swing-away toggles for quick and easy basket access
- Stainless Steel 316 mesh basket for maximum durability.

**APPLICATIONS INCLUDE:**

- Commercial and public swimming pools
- Resorts and aquatic centres
- Decorative water features
- Irrigation systems
- Gross pollutant removal
- Gross pollutants removal



**LEAF & LINT SUCTION STRAINERS (TABLE D)**

| Size | Flow LTR/ SEC | Code | Price |
|---|---|---|---|
| LLS010 | 10 | LLS10 | 5,681.60 |
| LLS-015 | 10<15 | LLS15/11090 | 5,293.30 |
| | 10<15 | LLS15/110110 | |
| LLS-030 | 15<30 | LLS30/160110 | 5,832.30 |
| | 15<30 | LLS30/160160 | 5,832.30 |
| LLS-050 | 30<50 | LLS50/200160 | 6,255.20 |
| | 30<50 | LLS50/200200 | 8,851.20 |
| LLS-075 | 50<75 | LLS75/225200 | 7,481.20 |
| | 50<75 | LLS75/225225 | |
| LLS-100 | 75<100 | LLS100/250225 | 9,395.30 |
| | 75<100 | LLS100/250250 | |
| LLS-710 | TBA | LLS710 | 24,928.30 |

**PLEASE NOTE: OUR RANGE OF LEAF & LINT SUCTION STRAINERS ARE NOT PRESSURE RATED.**

# POLYETHYLENE LEAF & LINT STRAINER

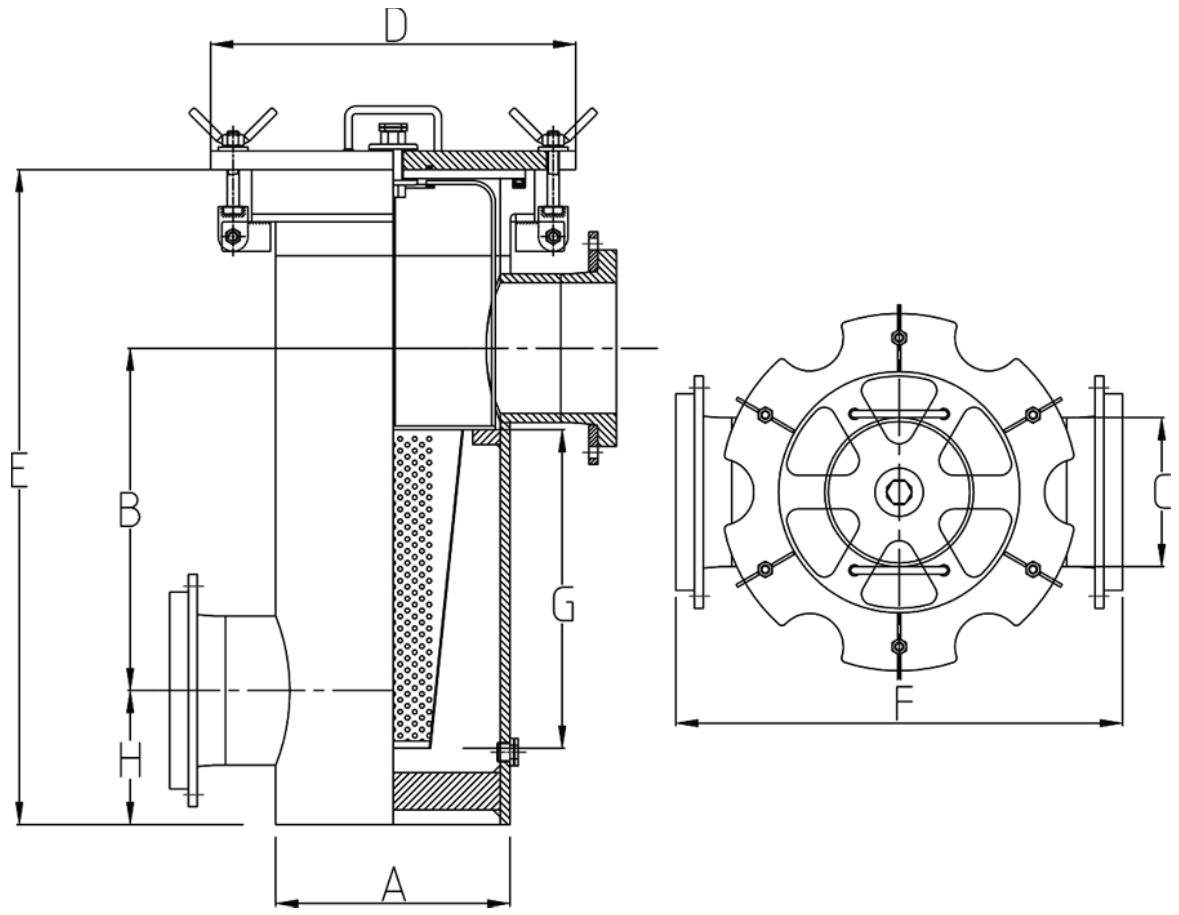


| STRAINER | FLOW | INLET | OUTLET | A | B | C | D | E | F | G | H |
|---|---|---|---|---|---|---|---|---|---|---|---|
| LLS-010 | 10 | 90 | 90 | 315/17 | 500 | 90 | 480 | 940 | 600 | 475 | 180 |
| LLS15/11090 | 10<15 | 110 | 90 | 315/17 | 500 | 110 | 480 | 940 | 600 | 475 | 180 |
| LLS15/110110 | 10<15 | 110 | 110 | 315/17 | 500 | 110 | 480 | 940 | 600 | 475 | 180 |
| LLS30/160110 | 15<30 | 160 | 110 | 315/17 | 500 | 160 | 480 | 940 | 600 | 475 | 180 |
| LLS30/160160 | 15<30 | 160 | 160 | 315/17 | 500 | 160 | 480 | 940 | 600 | 475 | 180 |
| LLS50/200160 | 30<50 | 200 | 160 | 400/17 | 500 | 200 | 570 | 990 | 750 | 475 | 225 |
| LLS50/200200 | 30<50 | 200 | 200 | 400/17 | 500 | 200 | 570 | 990 | 750 | 475 | 225 |
| LLS75/225200 | 50<75 | 225 | 200 | 450/21 | 500 | 225 | 635 | 1015 | 800 | 475 | 225 |
| LLS75/225225 | 50<75 | 225 | 225 | 450/21 | 500 | 225 | 635 | 1015 | 800 | 475 | 225 |
| LLS100/250225 | 75<100 | 250 | 225 | 500/21 | 560 | 250 | 680 | 1140 | 850 | 490 | 250 |
| LLS100/250250 | 75<100 | 250 | 250 | 500/21 | 560 | 250 | 680 | 1140 | 850 | 490 | 250 |
| LLS-710 | TBA | 355/630 | 355/630 | 710/17 | 766 | 355 | 900 | 1375 | 1300 | n/a | 760 |

**PLEASE NOTE: OUR RANGE OF LEAF & LINT SUCTION STRAINERS ARE NOT PRESSURE RATED.**



# CUSTOMER SPECIFICATION FORM

To ensure your Leaf & Lint Suction Strainer is manufactured to your project specifications, please complete the following and email it to sales@rodneyind.com.au

Company: _____

Contact Name: _____

Purchase Order Number: _____

Inlet Size: _____

Inlet Height (B): _____

Outlet Size: _____

Outlet Height: _____

Lid Options:
Standard or Poly Carbonate (Clear) _____

# VALVE SPARES





### GATE CHECK VALVE SPARE PARTS - SPINDLE ONLY

| mm | Inches | Code | Price |
|---|---|---|---|
| 80 | 3 | 41004 | 220.40 |
| 100 | 4 | 41002 | 229.80 |
| 125 | 5 | 41007 | 229.80 |
| 150 | 6 | 41006 | 231.50 |
| 200 | 8 | 41008 | 287.90 |



### GATE CHECK VALVE SPARE PARTS - DONKEY COMPLETE

| mm | Inches | Code | Price |
|---|---|---|---|
| 80 | 3 | DON3 | 437.00 |
| 100 | 4 | DON4 | 438.40 |
| 125 | 5 | DON5 | 438.40 |
| 150 | 6 | DON6 | 445.10 |
| 200 | 8 | DON8 | 461.20 |

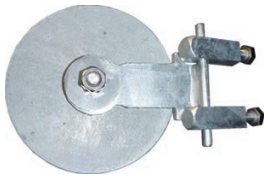

### FOOTVALVE SPARE PARTS - CLACK ASSEMBLY COMPLETE

| mm | Inches | Code | Price |
|---|---|---|---|
| 80 | 3 | FCA3 | 202.40 |
| 100 | 4 | FCA4 | 240.60 |
| 125 | 5 | FCA5 | 255.90 |
| 150 | 6 | FCA6 | 271.20 |
| 200 | 8 | FCA8 | 381.10 |

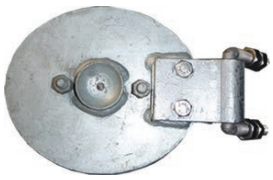

### CHECK VALVE SPARE PARTS - CLACK ASSEMBLY COMPLETE

| mm | Inches | Code | Price |
|---|---|---|---|
| 80 | 3 | GVCA3 | 362.80 |
| 100 | 4 | GVCA4 | 368.00 |
| 125 | 5 | GVCA5 | 384.10 |
| 150 | 6 | GVCA6 | 412.80 |
| 200 | 8 | GVCA8 | 644.10 |



### SUCTION STRAINERS - GALVANIZED

**Replacement for Rodney's Footvalve**

| mm | Inches | Mesh | Code | Price |
|---|---|---|---|---|
| 80 | 3 | Punched | 7115 | 96.30 |
| 100 | 4 | Punched | 7125 | 104.00 |
| 125 | 5 | Punched | 7135 | 120.80 |
| 150 | 6 | Punched | 7145 | 154.50 |
| 200 | 8 | Punched | 7165 | 209.20 |

# VALVE SPARES



### SUCTION STRAINERS - STAINLESS

**Replacement for Rodney's Footvalve**

| mm | Inches | Mesh | Code | Price |
|---|---|---|---|---|
| 80 | 3 | Punched | 7115SS | 300.50 |
| 100 | 4 | Punched | 7125SS | 316.80 |
| 125 | 5 | Punched | 7135SS | 345.80 |
| 150 | 6 | Punched | 7145SS | 392.40 |
| 200 | 8 | Punched | 7165SS316 | 792.90 |



### CHECK VALVE CLACK RUBBER

| mm | Inches | Code | Price |
|---|---|---|---|
| 80 | 3 | 11085EPDM | 18.90 |
| 100 | 4 | 11095EPDM | 24.50 |
| 125 | 5 | 11105EPDM | 27.10 |
| 150 | 6 | 11115EPDM | 32.20 |
| 200 | 8 | 11135EPDM | 48.80 |



### FOOTVALVE CLACK RUBBER

| mm | Inches | Code | Price |
|---|---|---|---|
| 80 | 3 | 11235EPDM | 14.60 |
| 100 | 4 | 11245EPDM | 21.70 |
| 125 | 5 | 11255EPDM | 24.50 |
| 150 | 6 | 11265EPDM | 30.00 |
| 200 | 8 | 11285EPDM | 35.50 |
| 250 | 10 | 11305EPDM | 54.30 |
| 300 | 12 | 11315EPDM | 70.30 |
| 350 | 14 | 11325EPDM | 76.70 |
| 375 | 15 | 11335EPDM | 113.60 |
| 400 | 16 | 11345EPDM | 120.40 |
| 450 | 18 | 11355EPDM | 125.30 |
| 500 | 20 | 11365EPDM | 131.40 |
| 600 | 24 | 11375EPDM | 176.80 |
| 750 | 30 | 11385EPDM | 271.40 |


Rodney Industries
TRIMA
SUMMIT
PERFORMANCE YOU CAN TRUST, SEASON AFTER SEASON



# GOOSENECKS & FLANGED PIPE

## QUALITY PIPING SOLUTIONS YOU CAN TRUST.

Rodney Industries' Goosenecks and Flanged Pipe deliver the proven strength, reliability, and versatility that Australian growers and irrigators trust. With an extensive range of sizes in both galvanised and polyethylene options, our products are engineered to perform in demanding environments and withstand long-term field use. Custom, non-standard lengths are also available on request, ensuring the right fit for every installation and providing tailored solutions that support efficient, dependable irrigation across a wide variety of applications.

# GOOSENECKS



HEAVY DUTY (TABLE D)

| Degree | Size mm | c/l height mm | Inches | Code | Price |
|---|---|---|---|---|---|
| 90° | 80 | 600 | 3 | 8035 | 515.50 |
| | 100 | 750 | 4 | 8040 | 584.30 |
| | 125 | 900 | 5 | 8045 | 755.60 |
| | 150 | 900 | 6 | 8050 | 915.80 |
| | 200 | 900 | 8 | 8055 | 1,300.50 |
| 45° | 80 | 600 | 3 | 8000 | 562.00 |
| | 100 | 750 | 4 | 8005 | 664.90 |
| | 125 | 900 | 5 | 8010 | 885.50 |
| | 150 | 900 | 6 | 8015 | 958.70 |
| | 200 | 900 | 8 | 8020 | 1,337.50 |



GOOSENECKS - FLANGED

| Size | | | Code | Price | Code | Price |
|---|---|---|---|---|---|---|
| mm | (h) | (l) | SDR17 | | SDR11 | |
| 110 | 750 | 980 | GN4511017 | 815.10 | GN4511011 | 841.00 |
| 125 | 900 | 1150 | GN4512517 | 918.50 | GN4512511 | 948.90 |
| 140 | 900 | 1150 | GN4514017 | 1,122.40 | GN4514011 | 1,186.20 |
| 160 | 900 | 1200 | GN4516017 | 1,225.70 | GN4516011 | 1,269.80 |
| 200 | 900 | 1250 | GN4520017 | 1,499.30 | GN4520011 | 1,576.90 |
| 225 | 900 | 1250 | GN4522517 | 1,653.10 | GN4522511 | 1,742.70 |
| 250 | 1000 | 1400 | GN4525017 | 2,491.00 | GN4525011 | 2,664.20 |
| 280 | 1000 | 1400 | GN4528017 | 3,112.90 | GN4528011 | 3,308.90 |
| 315 | 1250 | 1660 | GN4531517 | 3,715.10 | GN4531511 | 4,073.80 |

# FLANGED PIPE



1.6mm WALL THICKNESS (TABLE D)

| Length | mm | Inches | Code | Price |
|---|---|---|---|---|
| 900mm | 100 | 4 | 8520 | 321.10 |
| | 125 | 5 | 8580 | 392.50 |
| | 150 | 6 | 8640 | 405.80 |
| 1800mm | 100 | 4 | 8530 | 327.60 |
| | 125 | 5 | 8590 | 401.10 |
| | 150 | 6 | 8650 | 466.90 |
| 2700mm | 100 | 4 | 8540 | 379.40 |
| | 125 | 5 | 8600 | 466.90 |
| | 150 | 6 | 8660 | 546.70 |
| 3600mm | 100 | 4 | 8550 | 435.40 |
| | 125 | 5 | 8610 | 532.70 |
| | 150 | 6 | 8670 | 627.20 |
| 4500mm | 100 | 4 | 8560 | 488.60 |
| | 125 | 5 | 8620 | 599.90 |
| | 150 | 6 | 8680 | 704.80 |
| 5500mm | 100 | 4 | 8570 | 546.70 |
| | 125 | 5 | 8630 | 673.40 |
| | 150 | 6 | 8690 | 794.60 |

# FLANGED PIPE

**2.0mm WALL THICKNESS (TABLE D)**

| Length | mm | Inches | Code | Price |
|---|---|---|---|---|
| 900mm | 200 | 8 | 8880 | 568.90 |
| | 250 | 10 | 9000 | 782.80 |
| | 300 | 12 | 9055 | 914.30 |
| | 350 | 14 | 9170 | 1,281.00 |
| | 375 | 15 | 9300P | 1,356.80 |
| | 400 | 16 | 9360 | 1,433.80 |
| | 450 | 18 | 9470 | 1,760.90 |
| 18000mm | 200 | 8 | 8885 | 708.60 |
| | 250 | 10 | 9010 | 957.00 |
| | 300 | 12 | 9070 | 1,140.00 |
| | 350 | 14 | 9190 | 1,561.00 |
| | 375 | 15 | 9310P | 1,618.30 |
| | 400 | 16 | 9370 | 1,713.20 |
| | 450 | 18 | 9490 | 2,075.50 |
| 2700mm | 200 | 8 | 8895 | 849.60 |
| | 250 | 10 | 9020 | 1,131.00 |
| | 300 | 12 | 9090 | 1,367.00 |
| | 350 | 14 | 9210 | 1,836.70 |
| | 375 | 15 | 9320 | 1,830.10 |
| | 400 | 16 | 9390 | 1,993.80 |
| | 450 | 18 | 9510 | 2,390.70 |
| 3600mm | 200 | 8 | 8905 | 989.10 |
| | 250 | 10 | 9030 | 1,305.30 |
| | 300 | 12 | 9110 | 1,595.50 |
| | 350 | 14 | 9230 | 2,112.20 |
| | 375 | 15 | 9330 | 2,124.00 |
| | 400 | 16 | 9410 | 2,273.10 |
| | 450 | 18 | 9530 | 2,706.70 |
| 4500mm | 200 | 8 | 8915 | 1,123.80 |
| | 250 | 10 | 9040 | 1,480.10 |
| | 300 | 12 | 9130 | 1,819.00 |
| | 350 | 14 | 9250 | 2,390.70 |
| | 375 | 15 | 9340 | 2,407.70 |
| | 400 | 16 | 9430 | 2,416.50 |
| | 450 | 18 | 9550 | 3,019.10 |
| 5500mm | 200 | 8 | 8925 | 1,286.90 |
| | 250 | 10 | 9050 | 1,676.50 |
| | 300 | 12 | 9150 | 2,071.20 |
| | 350 | 14 | 9270 | 2,696.60 |
| | 375 | 15 | 9350 | 2,701.60 |
| | 400 | 16 | 9450 | 2,865.60 |
| | 450 | 18 | 9570 | 3,368.90 |

**4.0mm WALL THICKNESS (TABLE D)**

| Length | mm | Inches | Code | Price |
|---|---|---|---|---|
| 900mm | 80 | 3 | 8100 | 272.90 |
| | 100 | 4 | 8130 | 321.20 |
| | 125 | 5 | 8160 | 455.70 |
| | 150 | 6 | 8190 | 504.80 |
| | 200 | 8 | 8220 | 684.00 |
| 18000mm | 80 | 3 | 8105 | 345.80 |
| | 100 | 4 | 8135 | 425.70 |
| | 125 | 5 | 8165 | 583.10 |
| | 150 | 6 | 8195 | 656.50 |
| | 200 | 8 | 8225 | 908.60 |
| 2700mm | 80 | 3 | 8110 | 417.90 |
| | 100 | 4 | 8140 | 595.70 |
| | 125 | 5 | 8170 | 706.90 |
| | 150 | 6 | 8200 | 809.10 |
| | 200 | 8 | 8230 | 1,103.10 |
| 3600mm | 80 | 3 | 8115 | 491.30 |
| | 100 | 4 | 8145 | 700.70 |
| | 125 | 5 | 8175 | 833.60 |
| | 150 | 6 | 8205 | 961.70 |
| | 200 | 8 | 8235 | 1,296.30 |
| 4500mm | 80 | 3 | 8120 | 564.90 |
| | 100 | 4 | 8150 | 807.80 |
| | 125 | 5 | 8180 | 960.40 |
| | 150 | 6 | 8210 | 1,114.90 |
| | 200 | 8 | 8240 | 1,490.90 |
| 5500mm | 80 | 3 | 8125 | 646.10 |
| | 100 | 4 | 8155 | 923.90 |
| | 125 | 5 | 8185 | 1,108.70 |
| | 150 | 6 | 8215 | 1,284.40 |
| | 200 | 8 | 8245 | 1,705.80 |

# FLANGED PIPE



**SUCTION LINE - STRAIGHT - 6 MTRS**

| Size | Code | Price | Code | Price |
|---|---|---|---|---|
| mm | SDR17 | | SDR11 | |
| 90 | FP609017 | 466.60 | FP609011 | 517.80 |
| 110 | FP611017 | 595.40 | FP611011 | 702.70 |
| 125 | FP612517 | 757.10 | FP612511 | 847.00 |
| 140 | FP614017 | 824.20 | FP614011 | 1,144.50 |
| 160 | FP616017 | 1,037.30 | FP616011 | 1,178.10 |
| 200 | FP620017 | 1,498.50 | FP620011 | 1,808.30 |
| 225 | FP622517 | 1,788.90 | FP622511 | 2,125.20 |
| 250 | FP625017 | 1,959.90 | FP625011 | 2,537.30 |
| 280 | FP628017 | 2,546.10 | FP628011 | 2,928.10 |
| 315 | FP631517 | 2,679.80 | FP631511 | 3,644.70 |
| 355 | FP635517 | 3,949.60 | FP635511 | 4,321.00 |

**SUCTION LINE - STRAIGHT - 12 MTRS**

| Size | Code | Price | Code | Price |
|---|---|---|---|---|
| mm | SDR17 | | SDR11 | |
| 90 | FP1209017 | 618.10 | FP1209011 | 718.40 |
| 110 | FP1211017 | 794.10 | FP1211011 | 1,007.10 |
| 125 | FP1212517 | 996.70 | FP1212511 | 1,176.30 |
| 140 | FP1214017 | 1,084.70 | FP1214011 | 1,713.40 |
| 160 | FP1216017 | 1,385.70 | FP1216011 | 1,667.40 |
| 200 | FP1220017 | 2,095.40 | FP1220011 | 2,715.00 |
| 225 | FP1222517 | 2,567.30 | FP1222511 | 3,238.10 |
| 250 | FP1225017 | 2,762.60 | FP1225011 | 3,921.30 |
| 280 | FP1228017 | 3,784.00 | FP1228011 | 4,549.80 |
| 315 | FP1231517 | 3,875.40 | FP1231511 | 5,757.60 |
| 355 | FP1235517 | 6,169.80 | FP1235511 | 6,914.50 |



**SUCTION LINE COMPLETE WITH 45° SWEEP BEND - 6 MTRS**

| Size | Code | Price | Code | Price |
|---|---|---|---|---|
| mm | SDR17 | | SDR11 | |
| 90 | FPS609017 | 524.20 | FPS609011 | 569.50 |
| 110 | FPS611017 | 720.20 | FPS611011 | 857.00 |
| 125 | FPS612517 | 973.50 | FPS612511 | 1,102.80 |
| 140 | FPS614017 | 1,182.60 | FPS614011 | 1,559.50 |
| 160 | FPS616017 | 1,348.00 | FPS616011 | 1,856.30 |
| 200 | FPS620017 | 1,972.70 | FPS620011 | 2,405.20 |
| 225 | FPS622517 | 2,275.80 | FPS622511 | 2,795.50 |
| 250 | FPS625017 | 2,881.30 | FPS625011 | 3,320.70 |
| 280 | FPS628017 | 3,377.90 | FPS628011 | 4,038.20 |
| 315 | FPS631517 | 4,110.80 | FPS631511 | 4,839.70 |
| 355 | FPS635517 | 5,376.30 | FPS635511 | 6,134.70 |

**SUCTION LINE COMPLETE WITH 45° SWEEP BEND - 12 MTRS**

| Size | Code | Price | Code | Price |
|---|---|---|---|---|
| mm | SDR17 | | SDR11 | |
| 90 | FPS1209017 | 689.70 | FPS1209011 | 749.90 |
| 110 | FPS1211017 | 950.40 | FPS1211011 | 1,167.60 |
| 125 | FPS1212517 | 1,293.20 | FPS1212511 | 1,472.70 |
| 140 | FPS1214017 | 1,549.50 | FPS1214011 | 2,214.80 |
| 160 | FPS1216017 | 1,805.20 | FPS1216011 | 2,728.80 |
| 200 | FPS1220017 | 2,704.00 | FPS1220011 | 3,429.60 |
| 225 | FPS1222517 | 3,178.20 | FPS1222511 | 4,031.20 |
| 250 | FPS1225017 | 4,008.20 | FPS1225011 | 4,352.80 |
| 280 | FPS1228017 | 4,805.10 | FPS1228011 | 5,499.30 |
| 315 | FPS1231517 | 5,933.80 | FPS1231511 | 6,716.50 |
| 355 | FPS1235517 | 7,689.00 | FPS1235511 | 8,518.10 |



# GALVANISED
STAINLESS & ALUMINIUM FITTINGS

## VERSATILE FITTINGS FOR REAL-WORLD CONDITIONS

Rodney Industries offers a comprehensive range of galvanised, aluminium and stainless steel fittings — each designed to perform where it counts. Galvanised fittings provide durable, cost-effective protection in harsh environments; aluminium offers lightweight strength ideal for easy handling and transport; and stainless steel delivers premium corrosion resistance for demanding or long-term applications. With multiple materials and configurations available, there's a reliable solution for every project.

# BENDS





### GENERAL PURPOSE 4mm 45° FIXED FLANGE (TABLE D)

| mm | Inches | Code | Price |
|---|---|---|---|
| 80 | 3 | 1730 | 99.60 |
| 100 | 4 | 1735 | 147.20 |
| 125 | 5 | 1740 | 248.70 |
| 150 | 6 | 1750 | 271.80 |
| 200 | 8 | 1770 | 532.20 |



### GENERAL PURPOSE 4mm 45° LOOSE FLANGE (TABLE D)

| mm | Inches | Code | Price |
|---|---|---|---|
| 80 | 3 | 2050 | 107.70 |
| 100 | 4 | 2060 | 156.00 |
| 125 | 5 | 2070 | 259.90 |
| 150 | 6 | 2080 | 287.20 |
| 200 | 8 | 2100 | 550.90 |

### HEAVY DUTY MIN. 5mm 45° FIXED FLANGE (TABLE D)

| | mm | Inches | Code | Price |
|---|---|---|---|---|
| HEAVY DUTY | 80 | 3 | 1731 | 302.60 |
| | 100 | 4 | 1736 | 259.70 |
| | 125 | 5 | 1741 | 354.20 |
| | 150 | 6 | 1751 | 343.90 |
| | 200 | 8 | 1771 | 651.50 |
| | 250 | 10 | 1791 | 965.60 |
| | 300 | 12 | 1801 | 1,248.70 |

### HEAVY DUTY MIN. 5mm 45° LOOSE FLANGE (TABLE D)

| | mm | Inches | Code | Price |
|---|---|---|---|---|
| HEAVY DUTY | 80 | 3 | 2051 | 338.70 |
| | 100 | 4 | 2061 | 304.00 |
| | 125 | 5 | 2071 | 402.90 |
| | 150 | 6 | 2081 | 419.70 |
| | 200 | 8 | 2101 | 753.10 |
| | 250 | 10 | 2121 | 1,145.60 |
| | 300 | 12 | 2131 | 1,455.30 |



### General Purpose 4mm 90° Fixed Flange (Table D)

| mm | Inches | Code | Price |
|---|---|---|---|
| 80 | 3 | 1885 | 117.40 |
| 100 | 4 | 1890 | 175.80 |
| 125 | 5 | 1900 | 218.20 |
| 150 | 6 | 1910 | 362.30 |
| 200 | 8 | 1930 | 652.50 |



### GENERAL PURPOSE 4mm 90° LOOSE FLANGE (TABLE D)

| mm | Inches | Code | Price |
|---|---|---|---|
| 80 | 3 | 2225 | 123.90 |
| 100 | 4 | 2230 | 164.80 |
| 125 | 5 | 2240 | 259.90 |
| 150 | 6 | 2250 | 337.70 |
| 200 | 8 | 2270 | 671.70 |

### HEAVY DUTY MIN. 5mm 90° FIXED FLANGE (TABLE D)

| | mm | Inches | Code | Price |
|---|---|---|---|---|
| HEAVY DUTY | 80 | 3 | 1886 | 203.00 |
| | 100 | 4 | 1891 | 235.50 |
| | 125 | 5 | 1901 | 314.10 |
| | 150 | 6 | 1911 | 359.70 |
| | 200 | 8 | 1931 | 681.50 |
| | 250 | 10 | 1951 | 1,024.30 |
| | 300 | 12 | 1961 | 1,348.90 |

### HEAVY DUTY MIN. 5mm 90° LOOSE FLANGE (TABLE D)

| | mm | Inches | Code | Price |
|---|---|---|---|---|
| HEAVY DUTY | 80 | 3 | 2226 | 238.80 |
| | 100 | 4 | 2231 | 276.70 |
| | 125 | 5 | 2241 | 363.20 |
| | 150 | 6 | 2251 | 431.50 |
| | 200 | 8 | 2271 | 774.20 |
| | 250 | 10 | 2291 | 1,197.30 |
| | 300 | 12 | 2301 | 1,547.00 |

# BENDS



### 2mm LIGHT WALL 45° FIXED FLANGE (TABLE D)

| mm | Inches | Code | Price |
|---|---|---|---|
| 225 | 9 | 1780 | 1,018.30 |
| 250 | 10 | 1790 | 1,263.40 |
| 300 | 12 | 1800 | 1,426.80 |
| 350 | 14 | 1810 | 2,047.90 |
| 375 | 15 | 1820 | 2,039.70 |
| 400 | 16 | 1830 | 2,197.20 |
| 450 | 18 | 1840 | 2,558.60 |



### 2mm LIGHT WALL 45° LOOSE FLANGE (TABLE D)

| mm | Inches | Code | Price |
|---|---|---|---|
| 225 | 9 | 2110 | 1,086.60 |
| 250 | 10 | 2120 | 1,412.50 |
| 300 | 12 | 2130 | 1,488.90 |
| 350 | 14 | 2140 | 2,232.70 |
| 375 | 15 | 2150 | 2,160.70 |
| 400 | 16 | 2160 | 2,376.80 |
| 450 | 18 | 2170 | 3,024.70 |



### 2mm LIGHT WALL 90° FIXED FLANGE (TABLE D)

| mm | Inches | Code | Price |
|---|---|---|---|
| 225 | 9 | 1940 | 1,263.40 |
| 250 | 10 | 1950 | 1,642.60 |
| 300 | 12 | 1960 | 1,808.90 |
| 350 | 14 | 1970 | 2,602.40 |
| 375 | 15 | 1980 | 2,501.50 |
| 400 | 16 | 1990 | 2,698.80 |
| 450 | 18 | 2000 | 3,131.50 |



### 2mm LIGHT WALL 90° LOOSE FLANGE (TABLE D)

| mm | Inches | Code | Price |
|---|---|---|---|
| 225 | 9 | 2280 | 1,322.80 |
| 250 | 10 | 2290 | 1,767.20 |
| 300 | 12 | 2300 | 2,033.80 |
| 350 | 14 | 2310 | 2,788.40 |
| 375 | 15 | 2320 | 2,598.00 |
| 400 | 16 | 2330 | 3,457.40 |
| 450 | 18 | 2340 | 3,600.60 |

# BENDS





* Denotes Lobster Back Style 2mm Wall

**MEDIUM WALL LOOSE FLANGE 90°**

| mm | Inches | Code | Price |
|---|---|---|---|
| 80-40 | 3-1½ | 2380S | 504.90 |
| 80-50 | 3-2 | 2385S | 483.40 |
| 80-65 | 3-2½ | 2390S | 579.80 |
| 100-40 | 4-1½ | 2410S | 550.00 |
| 100-50 | 4-2 | 2420S | 564.80 |
| 100-65 | 4-2½ | 2430S | 608.70 |
| 100-80 | 4-3 | 2440S | 625.10 |
| 125-65 | 5-2½ | 2450S | 621.30 |
| 125-80 | 5-3 | 2460S | 668.20 |
| 125-100 | 5-4 | 2465S | 655.50 |
| 150-65 | 6-2½ | 2470S | 740.10 |
| 150-80 | 6-3 | 2475S | 780.20 |
| 150-100 | 6-4 | 2480S | 822.30 |
| 150-125 | 6-5 | 2490S | 797.90 |
| 200-125 | 8-5 | 2530S | 995.40 |
| 200-150 | 8-6 | 2540S | 922.10 |
| 250-150* | 10-6* | 2590S | 1,373.20 |
| 250-200* | 10-8* | 2600S | 1,830.60 |

# TEES





**1.6mm LIGHT WALL (TABLE D)**

| mm | Inches | Code | Price |
|---|---|---|---|
| 80-50 | 3-2 branch | 6130 | 459.50 |
| 80-80 | 3-3 | 6135 | 456.60 |
| 100-80 | 4-3 branch | 6140 | 495.90 |
| 100-100 | 4-4 | 6145 | 505.40 |
| 125-100 | 5-4 branch | 6150 | 567.40 |
| 125-125 | 5-5 | 6155 | 604.30 |
| 150-100 | 6-4 branch | 6160 | 622.30 |
| 150-150 | 6- 6 | 6165 | 637.70 |
| 200-150 | 8-6 branch | 6170 | 800.90 |
| 200-200 | 8- 8 | 6175 | 881.40 |
| 250-250 | 10-10 | 6195 | 1,464.30 |
| 300-300 | 12-12 | 6205 | 1,644.60 |

**HEAVY DUTY (TABLE D)**

| | mm | Inches | Code | Price |
|---|---|---|---|---|
| HEAVY DUTY | 80-80 | 3 | 6136 | 465.40 |
| | 100-100 | 4 | 6146 | 551.30 |
| | 125-125 | 5 | 6156 | 671.50 |
| | 150-150 | 6 | 6166 | 812.70 |
| | 200-200 | 8 | 6176 | 1,080.30 |
| | 250-250 | 10 | 6196 | 1,480.50 |
| | 300-300 | 12 | 6206 | 1,914.20 |
| | 350-350 | 14 | 6219 | 3,549.30 |

# TAPERS CONCENTRIC



## LIGHT WALL (TABLE D)

| mm | Inches | Code | Price | Code with socket | Price |
|---|---|---|---|---|---|
| 32-50 | 1¼-2 | 4985 | 245.90 | 4985S | 346.30 |
| 32-80 | 1¼-3 | 4995 | 248.90 | 4995S | 349.40 |
| 40-50 | 1½-2 | 5005 | 263.90 | 5005S | P.O.A |
| 40-65 | 1½-2½ | 5015 | 364.10 | 5015S | P.O.A |
| 40-80 | 1½-3 | 5025 | 268.10 | 5025S | 369.10 |
| 40-100 | 1½-4 | 5035 | 281.70 | 5035S | 382.70 |
| 50-65 | 2-2½ | 5075 | 284.60 | 5075S | P.O.A |
| 50-80 | 2-3 | 5045 | 428.70 | 5045S | 529.80 |
| 50-100 | 2-4 | 5055 | 289.80 | 5055S | 390.10 |
| 50-125 | 2-5 | 5065 | 318.70 | 5065S | P.O.A |
| 65- 80 | 2½-3 | 5085 | 273.40 | 5085S | 373.80 |
| 65-100 | 2½-4 | 5095 | 286.10 | 5095S | 387.20 |
| 65-125 | 2½-5 | 5105 | 313.60 | 5105S | 414.60 |
| 65-150 | 2½-6 | 5115 | 335.30 | 5115S | 436.10 |
| 80-100 | 3-4 | 5125 | 329.30 | 5125S | 428.70 |
| 80-125 | 3-5 | 5135 | 356.70 | 5135S | 456.30 |
| 80-150 | 3-6 | 5145 | 378.30 | 5145S | 479.30 |
| 80-200 | 3-8 | 5155 | 382.70 | 5155S | 482.20 |
| 100-125 | 4-5 | 5165 | 301.00 | 5165S | 401.30 |
| 100-150 | 4-6 | 5175 | 317.40 | 5175S | 417.60 |
| 100-175 | 4-7 | 5185 | 369.10 | 5185S | P.O.A |
| 100-200 | 4-8 | 5195 | 395.40 | 5195S | 495.60 |
| 100-225 | 4-9 | 5205 | 466.70 | 5205S | P.O.A |
| 125-150 | 5-6 | 5215 | 313.60 | 5215S | 414.60 |
| 125-175 | 5-7 | 5285 | 380.40 | 5285S | P.O.A |
| 125-200 | 5-8 | 5225 | 405.80 | 5225S | 506.90 |
| 125-225 | 5-9 | 5235 | 485.30 | 5235S | P.O.A |
| 125-250 | 5-10 | 5245 | 517.20 | 5245S | P.O.A |
| 150-200 | 6-8 | 5255 | 416.20 | 5255S | 517.20 |
| 150-225 | 6-9 | 5265 | 500.80 | 5265S | P.O.A |
| 150-250 | 6-10 | 5275 | 576.50 | 5275S | 645.20 |
| 175-200 | 7-8 | 5305 | 476.20 | 5305S | P.O.A |
| 200-225 | 8-9 | 5315 | 565.40 | 5315S | P.O.A |
| 200-250 | 8-10 | 5325 | 647.90 | 5325S | 650.10 |
| 200-300 | 8-12 | 5335 | 727.40 | 5335S | P.O.A |
| 250-300 | 10-12 | 5375 | 768.20 | 5375S | 827.90 |



## SGP GENERAL PURPOSE - 4mm WALL (MIN.) (TABLE D)

| mm | Inches | Code | Price | Code with socket | Price |
|---|---|---|---|---|---|
| 50– 80 | 2–3 | 5045GP | 127.50 | 5045GPS | 158.60 |
| 50–100 | 2–4 | 5055GP | 167.70 | 5055GPS | 204.70 |
| 65– 80 | 2½ –3 | 5085GP | 128.90 | 5085GPS | 165.00 |
| 65–100 | 2 ½–4 | 5095GP | 167.70 | 5095GPS | 203.20 |
| 65–125 | 2½ –5 | 5105GP | 235.70 | 5105GPS | P.O.A |
| 65–150 | 2 ½–6 | 5115GP | 264.10 | 5115GPS | 298.90 |
| 80–100 | 3–4 | 5125GP | 169.30 | 5125GPS | 204.70 |
| 80–125 | 3–5 | 5135GP | 237.20 | 5135GPS | 272.60 |
| 80–150 | 3–6 | 5145GP | 260.60 | 5145GPS | 297.40 |
| 100–125 | 4–5 | 5165GP | 237.20 | 5165GPS | P.O.A |
| 100–150 | 4–6 | 5175GP | 279.00 | 5175GPS | 316.50 |
| 100–200 | 4–8 | 5195GP | 408.70 | 5195GPS | 446.20 |
| 125–150 | 5–6 | 5215GP | 277.70 | 5215GPS | 315.00 |
| 125–200 | 5–8 | 5225GP | 396.60 | 5225GPS | 433.40 |
| 150–200 | 6–8 | 5255GP | 405.80 | 5255GPS | 441.90 |



## HEAVY DUTY - 5mm WALL (MIN.) (TABLE D)

| | mm | Inches | Code | Price | Code with socket | Price |
|---|---|---|---|---|---|---|
| HEAVY DUTY | 65-100 | 2½-4 | 5097 | 259.60 | 5097S | 281.20 |
| | 80-100 | 3-4 | 5127 | 278.20 | 5127S | P.O.A |
| | 80-150 | 3-6 | 5147 | 302.70 | 5147S | 318.20 |
| | 100-125 | 4-5 | 5167 | 328.60 | 5167S | 349.30 |
| | 100-150 | 4-6 | 5177 | 368.50 | 5177S | 382.00 |
| | 125-150 | 5-6 | 5217 | 385.10 | 5217S | 422.00 |
| | 125-200 | 5-8 | 5227 | 525.90 | 5227S | 527.40 |
| | 150-200 | 6-8 | 5257 | 556.20 | 5257S | 619.30 |
| | 200-250 | 8-10 | 5327 | 831.20 | 5327S | 865.20 |
| | 250-300 | 10-12 | 5377 | 1,129.40 | 5377S | P.O.A |

# TAPERS ECCENTRIC





### LIGHT WALL (TABLE D)

| mm | Inches | Code | Price | Code with socket | Price |
|---|---|---|---|---|---|
| 32-50 | 1¼-2 | 5645 | 249.40 | 5645S | 333.40 |
| 32-80 | 1¼-3 | 5655 | 215.10 | 5655S | 300.80 |
| 40-50 | 1½-2 | 5665 | 264.40 | 5665S | 347.50 |
| 40-65 | 1½-2½ | 5675 | 268.70 | 5675S | 352.50 |
| 40-80 | 1½-3 | 5685 | 418.60 | 5685S | 425.70 |
| 40-100 | 1½-4 | 5695 | 283.80 | 5695S | 464.90 |
| 50-65 | 2-2½ | 5730 | 297.80 | 5730S | 495.10 |
| 50-80 | 2-3 | 5710 | 279.30 | 5710S | 379.00 |
| 50-100 | 2-4 | 5715 | 290.60 | 5715S | 391.00 |
| 50-125 | 2-5 | 5720 | 363.50 | 5720S | 464.80 |
| 65- 80 | 2½-3 | 5725 | 274.00 | 5725S | 374.70 |
| 65-100 | 2½-4 | 5735 | 286.80 | 5735S | 388.00 |
| 65-125 | 2½-5 | 5740 | 314.30 | 5740S | 415.40 |
| 65-150 | 2½-6 | 5745 | 334.30 | 5745S | 435.70 |
| 80-100 | 3-4 | 5750 | 330.10 | 5750S | 429.70 |
| 80-125 | 3-5 | 5755 | 358.90 | 5755S | 458.80 |
| 80-150 | 3-6 | 5760 | 379.00 | 5760S | 480.30 |
| 80-200 | 3-8 | 5765 | 448.40 | 5765S | 548.90 |
| 100-125 | 4-5 | 5770 | 301.60 | 5770S | 402.10 |
| 100-150 | 4-6 | 5775 | 318.00 | 5775S | 418.60 |
| 100-175 | 4-7 | 5780 | 370.20 | 5780S | P.O.A |
| 100-200 | 4-8 | 5785 | 396.10 | 5785S | 496.80 |
| 100-225 | 4-9 | 5790 | 467.80 | 5790S | P.O.A |
| 125-150 | 5-6 | 5795 | 314.30 | 5795S | 415.40 |
| 125-175 | 5-7 | 5845 | 381.30 | 5845S | P.O.A |
| 125-200 | 5-8 | 5800 | 406.70 | 5800S | 507.90 |
| 125-225 | 5-9 | 5805 | 486.30 | 5805S | 505.40 |
| 125-250 | 5-10 | 5810 | 518.40 | 5810S | 618.10 |
| 150-200 | 6-8 | 5815 | 417.10 | 5815S | 518.40 |
| 150-225 | 6-9 | 5825 | 501.90 | 5825S | 524.90 |
| 150-250 | 6-10 | 5835 | 577.90 | 5835S | 679.20 |
| 175-200 | 7-8 | 5865 | 477.30 | 5865S | P.O.A |
| 200-225 | 8-9 | 5875 | 566.70 | 5875S | P.O.A |
| 200-250 | 8-10 | 5895 | 649.50 | 5895S | 750.00 |
| 200-300 | 8-12 | 5905 | 729.20 | 5905S | 830.40 |
| 250-300 | 10-12 | 5945 | 836.20 | 5945S | 937.50 |



### SGP GENERAL PURPOSE - 4mm WALL (MIN.) (TABLE D)

| mm | Inches | Code | Price | Code with socket | Price |
|---|---|---|---|---|---|
| 50– 80 | 2–3 | 5710GP | 132.60 | 5710GPS | 201.90 |
| 50–100 | 2–4 | 5715GP | 172.10 | 5715GPS | 204.70 |
| 65– 80 | 2½ –3 | 5725GP | 132.60 | 5725GPS | 201.90 |
| 65–100 | 2 ½–4 | 5735GP | 172.10 | 5735GPS | 204.70 |
| 65–125 | 2½ –5 | 5740GP | 218.80 | 5740GPS | 251.40 |
| 65–150 | 2 ½–6 | 5745GP | 279.00 | 5745GPS | 313.80 |
| 80–100 | 3–4 | 5750GP | 173.60 | 5750GPS | 206.30 |
| 80–125 | 3–5 | 5755GP | 220.30 | 5755GPS | 252.90 |
| 80–150 | 3–6 | 5760GP | 274.10 | 5760GPS | 308.20 |
| 100–125 | 4–5 | 5770GP | 245.20 | 5770GPS | 277.70 |
| 100–150 | 4–6 | 5775GP | 291.80 | 5775GPS | 323.70 |
| 100–200 | 4–8 | 5785GP | 429.10 | 5785GPS | 462.50 |
| 125–150 | 5–6 | 5795GP | 286.80 | 5795GPS | 319.40 |
| 125–200 | 5–8 | 5800GP | 417.00 | 5800GPS | 449.00 |
| 150–200 | 6–8 | 5815GP | 422.80 | 5815GPS | 455.40 |



### HEAVY DUTY - 5mm WALL (MIN.) (TABLE D)

| | mm | Inches | Code | Price | Code with socket | Price |
|---|---|---|---|---|---|---|
| HEAVY DUTY | 65-100 | 2½-4 | 5733 | 263.40 | 5733S | 358.90 |
| | 80-100 | 3-4 | 5753 | 282.40 | 5753S | 358.90 |
| | 80-150 | 3-6 | 5763 | 306.30 | 5763S | 359.70 |
| | 100-125 | 4-5 | 5773 | 330.00 | 5773S | 372.40 |
| | 100-150 | 4-6 | 5778 | 373.10 | 5778S | 385.60 |
| | 125-150 | 5-6 | 5798 | 389.40 | 5798S | 400.60 |
| | 125-200 | 5-8 | 5803 | 531.80 | 5803S | 625.80 |
| | 150-200 | 6-8 | 5818 | 559.30 | 5818S | 559.30 |
| | 200-250 | 8-10 | 5898 | 846.20 | 5898S | 855.80 |
| | 250-300 | 10-12 | 5948 | 1,114.00 | 5948S | 1,049.00 |

# ACCESSORIES



### FLANGE SUPPORT BRACKET

| mm | Inches | Code | Price |
|---|---|---|---|
| 50 | 2 | FSB2 | 19.30 |
| 80 | 3 | FSB3 | 29.60 |
| 100 | 4 | FSB4 | 32.20 |
| 125 | 5 | FSB5 | 34.60 |
| 150 | 6 | FSB6 | 34.60 |
| 200 | 8 | FSB8 | 37.00 |
| 225 | 9 | FSB9 | 27.20 |
| 250 | 10 | FSB10 | 83.20 |
| 300 | 12 | FSB12 | 90.70 |
| 350 | 14 | FSB14 | 114.30 |
| 375 | 15 | FSB15 | 158.50 |
| 400 | 16 | FSB16 | 167.40 |
| 450* | 18* | FSB18 | 201.90 |
| 500* | 20* | FSB20 | 194.80 |
| 600* | 24* | FSB24 | 233.40 |



* Denotes different style for larger brackets.



### ADJUSTABLE FLANGE SUPPORT BRACKET

| mm | Inches | Code | Price |
|---|---|---|---|
| 80 | 3 | FSB3A | 104.00 |
| 100 | 4 | FSB4A | 104.00 |
| 125 | 5 | FSB5A | 104.00 |
| 150 | 6 | FSB6A | 104.00 |
| 200 | 8 | FSB8A | 104.00 |



### BORE CAPS

| Size | | | | Code | Price |
|---|---|---|---|---|---|
| mm | OD | Thickness | Slot | | |
| 32 | 230 | 8 | 55 x 25W | 4200 | 100.50 |
| 40 | 230 | 8 | 55 x 25W | 4201 | 105.60 |
| 50 | 230 | 8 | 55 x 25W | 4202 | 107.70 |
| 65 | 230 | 8 | 55 x 25W | 4203 | 117.10 |
| 80 | 285 | 10 | 70 x 25W | 4204 | 144.20 |
| 100 | 285 | 10 | 70 x 25W | 4206 | 163.10 |



### BORE CAPS STAINLESS STEEL

| Size | | | | Code | Price |
|---|---|---|---|---|---|
| mm | OD | Thickness | Slot | | |
| 32 | 230 | 8 | 55 x 25W | 4200SS316 | 241.10 |
| 40 | 230 | 8 | 55 x 25W | 4201SS316 | 256.40 |
| 50 | 230 | 8 | 55 x 25W | 4202SS316 | 288.30 |
| 65 | 230 | 8 | 55 x 25W | 4203SS316 | 303.50 |
| 80 | 285 | 10 | 70 x 25W | 4204SS316 | 446.20 |
| 100 | 285 | 10 | 70 x 25W | 4206SS316 | 511.30 |



### BORE CAPS - DUAL FBSP TO SUIT DEEP WELL PUMP

| mm | Code | Price |
|---|---|---|
| 32mm x 40mm | 4210G | 177.00 |
| 40mm x 50mm | 4207G | 335.40 |

# FLANGES





### WELD ON GALV (TABLE D)

| mm | Inches | Thickness | Code | Price |
|---|---|---|---|---|
| 50 | 2 | 10 | 10495 | 28.90 |
| 65 | 2½ | 10 | 10505 | 31.80 |
| 80 | 3 | 10 | 10515 | 34.80 |
| 100 | 4 | 10 | 10525 | 50.10 |
| 125 | 5 | 10 | 10535 | 63.40 |
| 150 | 6 | 10 | 10545 | 73.10 |
| 175 | 7 | 10 | 10555 | 94.40 |
| 200 | 8 | 12 | 10565 | 118.50 |
| 225 | 9 | 12 | 10575 | 146.20 |
| 250 | 10 | 12 | 10585 | 170.30 |
| 300 | 12 | 12 | 10595 | 185.70 |
| 350 | 14 | 16 | 10605 | 312.50 |
| 375 | 15 | 16 | 10615 | 335.40 |
| 400 | 16 | 16 | 10625 | 359.70 |
| 450 | 18 | 20 | 10635 | 528.50 |
| 500 | 20 | 20 | 10645 | 744.40 |
| 600 | 24 | 20 | 10655 | 800.30 |
| 750 | 30 | 20 | 10665 | 1,373.70 |
| 900 | 36 | 20 | 10675 | 1,533.00 |

### BLANK GALV

| mm | Inches | Thickness | Code | Price |
|---|---|---|---|---|
| 50 | 2 | 10 | 10497 | 50.10 |
| 65 | 2½ | 10 | 10507 | 53.90 |
| 80 | 3 | 10 | 10517 | 56.10 |
| 100 | 4 | 10 | 10527 | 57.60 |
| 125 | 5 | 10 | 10537 | 65.00 |
| 150 | 6 | 10 | 10547 | 108.40 |
| 200 | 8 | 12 | 10567 | 131.30 |
| 250 | 10 | 12 | 10587 | 184.40 |
| 300 | 12 | 12 | 10597 | 207.90 |
| 350 | 14 | 16 | 10607 | 362.70 |
| 375 | 15 | 16 | 10617 | 405.30 |
| 400 | 16 | 16 | 10627 | 320.60 |
| 450 | 18 | 20 | 10637 | 597.70 |
| 500 | 20 | 20 | 10647 | 718.60 |
| 600 | 24 | 20 | 10657 | 942.60 |
| 750 | 30 | 20 | 10667 | P.O.A |
| 900 | 36 | 20 | 10677 | P.O.A |

# GASKETS



### RUBBER GASKETS

| Size | | Code | Price |
|---|---|---|---|
| mm | Inches | | |
| 40 | 1½ | 11395 | 7.20 |
| 50 | 2 | 11405 | 7.20 |
| 65 | 2½ | 11415 | 7.20 |
| 80 | 3 | 11425 | 8.30 |
| 100 | 4 | 11435 | 8.30 |
| 125 | 5 | 11445 | 9.90 |
| 150 | 6 | 11455 | 9.90 |
| 175 | 7 | 11465 | 13.30 |
| 200 | 8 | 11475 | 13.30 |
| 225 | 9 | 11485 | 13.30 |

### RUBBER GASKETS

| Size | | Code | Price |
|---|---|---|---|
| mm | Inches | | |
| 250 | 10 | 11495 | 16.10 |
| 300 | 12 | 11505 | 17.40 |
| 350 | 14 | 11515 | 20.10 |
| 375 | 15 | 11525 | 28.50 |
| 400 | 16 | 11535 | 30.00 |
| 450 | 18 | 11545 | 30.00 |
| 500 | 20 | 11555 | 40.50 |
| 600 | 24 | 11565 | 55.70 |
| 750 | 30 | 11575 | 76.70 |
| 900 | 36 | 11585 | 96.10 |

# CONNECTORS





### THREADED - HOSE ENDS

| mm | Inches | Code | Price |
|---|---|---|---|
| 80-50 BSP | 3-2 | 4716 | 122.90 |
| 80-80 BSP | 3-3 | 4726 | 136.10 |
| 100-80 BSP | 4-3 | 4736 | 150.10 |
| 100-100 BSP | 4-4 | 4746 | 152.90 |
| 125-125 BSP | 5-5 | 4756 | 181.80 |
| 150-150 BSP | 6-6 | 4766 | 253.00 |

### TO HOSE (TWO BEADS)

| mm | Inches | Code | Price |
|---|---|---|---|
| 50 | 2 | 3060B2 | 34.90 |
| 65 | 2½ | 3070B2 | 41.50 |
| 80 | 3 | 3080B2 | 59.30 |
| 100 | 4 | 3090B2 | 89.50 |
| 125 | 5 | 4000B2 | 112.40 |
| 150 | 6 | 4010B2 | 131.70 |





### FLANGED & THREADED BSP (TABLE D)

| mm | Inches | Code | Price |
|---|---|---|---|
| 65-65 BSP | 2½-2½ BSP | 3795 | 163.30 |
| 80-80 BSP | 3-3 BSP | 3805 | 165.60 |
| 100-100 BSP | 4-4 BSP | 3815 | 175.20 |
| 125-125 BSP | 5-5 BSP | 3825 | 202.70 |
| 150-80 BSP | 6-3 BSP | 4265 | 316.10 |
| 150-125 BSP | 6-5 BSP | 4285 | 372.00 |
| 150-150 BSP | 6-6 BSP | 3835 | 257.90 |

### ENLARGING FLANGED & THREADED BSP (TABLE D)

| mm | Inches | Code | Price |
|---|---|---|---|
| 50-80 BSP | 2-3 BSP | 3875 | 257.90 |
| 50-100 BSP | 2-4 BSP | 3885 | 270.50 |
| 65-80 BSP | 2½-3 BSP | 3920 | 264.60 |
| 80-100 BSP | 3-4 BSP | 3930 | 259.50 |
| 100-125 BSP | 4-5 BSP | 3945 | 274.20 |
| 100-150 BSP | 4-6 BSP | 3950 | 319.70 |
| 125-150 BSP | 5-6 BSP | 3955 | 334.60 |



### REDUCING FLANGED & THREADED BSP (TABLE D)

| mm | Inches | Code | Price |
|---|---|---|---|
| 65-50 BSP | 2½-2 BSP | 4165 | 175.20 |
| 80-50 BSP | 3-2 BSP | 4185 | 244.60 |
| 100-50 BSP | 4-2 BSP | 4215 | 256.50 |
| 100-80 BSP | 4-3 BSP | 4235 | 256.50 |
| 125-80 BSP | 5-3 BSP | 4245 | 300.50 |
| 125-100 BSP | 5-4 BSP | 4255 | 316.10 |
| 150-100 BSP | 6-4 BSP | 4275 | 333.30 |

# FLANGED CONNECTORS





**1.6mm WALL THICKNESS (TABLE D)**

| Length | mm | Inches | Code | Price |
|---|---|---|---|---|
| 300mm | 80 | 3 | 3600 | 216.90 |
| | 100 | 4 | 3610 | 239.00 |
| | 125 | 5 | 3620 | 288.50 |
| | 150 | 6 | 3630 | 332.30 |
| | 200 | 8 | 3650 | 460.30 |
| | 250 | 10 | 3670 | 644.50 |
| | 300 | 12 | 3680 | 719.50 |
| 600mm | 80 | 3 | 3605 | 227.60 |
| | 100 | 4 | 3615 | 255.10 |
| | 125 | 5 | 3625 | 308.70 |
| | 150 | 6 | 3635 | 356.90 |
| | 200 | 8 | 3655 | 502.50 |
| | 250 | 10 | 3675 | 698.30 |
| | 300 | 12 | 3685 | 789.30 |



**4.0mm WALL THICKNESS (TABLE D)**

| | Length | mm | Inches | Code | Price |
|---|---|---|---|---|---|
| HEAVY DUTY | 300mm | 80 | 3 | 3601 | 218.30 |
| | | 100 | 4 | 3611 | 248.80 |
| | | 125 | 5 | 3621 | 329.40 |
| | | 150 | 6 | 3631 | 352.70 |
| | | 200 | 8 | 3651 | 616.20 |
| | | 250 | 10 | 3671 | 723.00 |
| | | 300 | 12 | 3681 | 736.50 |
| | 600mm | 80 | 3 | 3606 | 240.40 |
| | | 100 | 4 | 3616 | 284.80 |
| | | 125 | 5 | 3626 | 371.00 |
| | | 150 | 6 | 3636 | 400.80 |
| | | 200 | 8 | 3656 | 660.80 |
| | | 250 | 10 | 3676 | 1,000.80 |
| | | 300 | 12 | 3686 | 1,241.70 |

# FLANGED HOSE ENDS

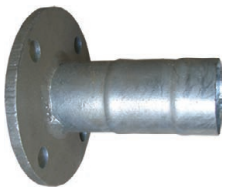

**STRAIGHT: 1.6mm WALL LIGHT DUTY (TABLE D)**

| mm | inch | Code | Price |
|---|---|---|---|
| 80 | 3 | 4356 | 95.90 |
| 100 | 4 | 4366 | 109.00 |
| 125 | 5 | 4376 | 140.70 |
| 150 | 6 | 4386 | 165.10 |
| 200 | 8 | 4406 | 177.50 |
| 250 | 10 | 4426 | 252.00 |
| 300 | 12 | 4436 | 555.50 |



**REDUCING: 1.6mm WALL LIGHT DUTY (TABLE D)**

| mm | Inches | Code | Price |
|---|---|---|---|
| 80- 50 | 3-2 | 4786 | 101.80 |
| 100- 50 | 4-2 | 4796 | 197.40 |
| 100- 80 | 4-3 | 4806 | 201.90 |
| 125- 80 | 5-3 | 4816 | 233.60 |
| 125-100 | 5-4 | 4826 | 206.40 |
| 150- 80 | 6-3 | 4986 | 227.60 |
| 150-100 | 6-4 | 4836 | 359.60 |
| 150-125 | 6-5 | 4846 | 246.80 |
| 200-100 | 8-4 | 4856 | 332.40 |
| 200-150 | 8-6 | 4866 | 426.70 |



**ECCENTRIC: 1.6mm WALL LIGHT DUTY (TABLE D)**

| mm | Inches | Code | Price |
|---|---|---|---|
| 80-100 | 3-4 | 4547 | 288.90 |
| 80-125 | 3-5 | 4557 | 280.60 |
| 80-150 | 3-6 | 4567 | 336.70 |
| 100-125 | 4-5 | 4577 | 326.50 |
| 100-150 | 4-6 | 4587 | 361.00 |
| 125-150 | 5-6 | 4597 | 355.20 |



**ENLARGING: 1.6mm WALL LIGHT DUTY (TABLE D)**

| mm | Inches | Code | Price |
|---|---|---|---|
| 50- 80 | 2-3 | 4546 | 118.50 |
| 50-100 | 2-4 | 4556 | 269.80 |
| 65- 80 | 2½ -3 | 4566 | 136.30 |
| 65-100 | 2½ -4 | 4576 | 267.60 |
| 80-100 | 3-4 | 4586 | 176.20 |
| 80-125 | 3-5 | 4596 | 280.60 |
| 80-150 | 3-6 | 4606 | 297.00 |
| 100-125 | 4-5 | 4616 | 237.30 |
| 100-150 | 4-6 | 4626 | 433.90 |
| 125-150 | 5-6 | 4636 | 207.80 |
| 200-250 | 8-10 | 4656 | 436.80 |

# HOSE JOINERS, TAILS & CLAMPS





### HOSE JOINER - SINGLE BEAD TO EACH END: MIN 1.6mm WALL LIGHT DUTY

| mm | Inches | Code | Price |
|---|---|---|---|
| 50 | 2 | 3060 | 41.50 |
| 65 | 2½ | 3070 | 44.40 |
| 80 | 3 | 3080 | 47.40 |
| 100 | 4 | 3090 | 51.90 |
| 125 | 5 | 4000 | 86.60 |
| 150 | 6 | 4010 | 109.60 |
| 200 | 8 | 4020 | 155.30 |



### HEAVY DUTY HOSE JOINER (MACHINED) (TABLE D)

| mm | Inches | Code | Price |
|---|---|---|---|
| 80 | 3 | 3080HD | 162.00 |
| 100 | 4 | 3090HD | 230.00 |
| 125 | 5 | 4000HD | 359.40 |
| 150 | 6 | 4010HD | 439.90 |



### HEAVY DUTY HOSE TAIL (MACHINED)

| mm | Inches | Code | Price |
|---|---|---|---|
| 80 | 3 | 4356HD | 173.20 |
| 100 | 4 | 4366HD | 221.20 |
| 125 | 5 | 4376HD | 314.60 |
| 150 | 6 | 4386HD | 388.20 |
| 200 | 8 | 4406HD | 909.10 |
| 250 | 10 | 4426HD | 1,318.80 |



### MACHINED – SUIT STANDARD LAYFLAT HOSE

| mm | Inches | Code | Price |
|---|---|---|---|
| 110 | 4 | 4978 | 344.80 |
| 114 | 4½ | 4980 | 362.60 |
| 125 | 5 | 4982 | 370.70 |
| 150 | 6 | 4984 | 419.20 |



### STANDARD STAINLESS STEEL

| mm | Inches | Code | Price |
|---|---|---|---|
| 100 | 4 | 4905SS | P.O.A |
| 125 | 5 | 4915SS | 58.20 |
| 150 | 6 | 4925SS | 59.80 |
| 200 | 8 | 4945SS | 61.20 |



### STANDARD ZINC PLATED

| mm | Inches | Code | Price |
|---|---|---|---|
| 80 | 3 | 4895 | 26.20 |
| 100 | 4 | 4905 | 28.40 |
| 125 | 5 | 4915 | 30.70 |
| 150 | 6 | 4925 | 32.50 |
| 200 | 8 | 4945 | 51.00 |

# REDUCERS





### STANDARD

| mm | inch | Code | Price |
|---|---|---|---|
| 80–50 | 3–2 | 495 | 73.20 |
| 100–50 | 4–2 | 515 | 74.60 |
| 100–80 | 4–3 | 525 | 85.30 |
| 125–80 | 5–3 | 535 | 124.70 |
| 125–100 | 5–4 | 545 | 93.40 |
| 150–125 | 6–5 | 555 | 97.60 |
| 150–100 | 6–4 | 565 | 246.40 |

### SPECIAL - TO SUIT IRRIGATION HOSE

| mm | inch | Code | Price |
|---|---|---|---|
| 80-65 | 3-2 ½ | 496 | 189.50 |
| 100–89 | 4–3 ½ | 526 | 205.70 |
| 125–89 | 5–3 ½ | 536 | 304.70 |
| 125–114 | 5–4 ½ | 546 | 224.50 |

# TEES





### STANDARD

| mm | inch | Code | Price |
|---|---|---|---|
| 50 | 2 | 25 | 69.00 |
| 80 | 3 | 35 | 78.60 |
| 100 | 4 | 45 | 97.60 |
| 125 | 5 | 55 | 105.70 |
| 150 | 6 | 65 | 154.40 |

### SINGLE REDUCING

| mm | inch | Code | Price |
|---|---|---|---|
| 80–80–50 | 3–3–2 | 95 | 77.10 |
| 100–100–50 | 4–4–2 | 105 | 81.20 |
| 100–100–80 | 4–4–3 | 115 | 89.30 |
| 125–125–50 | 5–5–2 | 125 | 100.30 |
| 125–125–100 | 5–5–4 | 135 | 111.10 |
| 150–150–125 | 6–6–5 | 145 | 146.20 |





### DOUBLE REDUCING

| mm | inch | Code | Price |
|---|---|---|---|
| 80–50–50 | 3–2–2 | 155 | 139.50 |
| 100–50–50 | 4–2–2 | 165 | 143.50 |
| 100–80–80 | 4–3–3 | 175 | 154.40 |
| 125–100–100 | 5–4–4 | 185 | 166.50 |
| 150–125–125 | 6–5–5 | 195 | 189.50 |

### THREADED BRANCH

| mm | inch | Code | Price |
|---|---|---|---|
| 50–50–50 | 2–2–2 | 235 | 92.10 |
| 80–80–50 | 3–3–2 | 240 | 101.60 |
| 80–80–80 | 3–3–3 | 245 | 119.20 |
| 80–80–100 | 3–3–4 | 265 | 224.50 |
| 100–100–50 | 4–4–2 | 275 | 112.40 |
| 100–100–80 | 4–4–3 | 285 | 124.70 |
| 100–100–100 | 4–4–4 | 295 | 128.70 |
| 125–125–50 | 5–5–2 | 305 | 138.20 |
| 150–150–100 | 6–6–4 | 315 | 174.60 |

# CROSSES



### STANDARD

| mm | inch | Code | Price |
|---|---|---|---|
| 50 | 2 | 325 | 77.10 |
| 80 | 3 | 335 | 83.90 |
| 100 | 4 | 345 | 104.20 |
| 125 | 5 | 355 | 135.40 |
| 150 | 6 | 365 | 193.60 |



### SINGLE REDUCING

| mm | inch | Code | Price |
|---|---|---|---|
| 80–80–80–50 | 3–3–3–2 | 375 | 96.10 |
| 100–100–100– 80 | 4–4–4–3 | 385 | 123.20 |
| 125–125–125–100 | 5–5–5–4 | 395 | 151.80 |
| 150–150–150–125 | 6–6–6–5 | 405 | 196.30 |



### DOUBLE REDUCING

| mm | inch | Code | Price |
|---|---|---|---|
| 80–80–50–50 | 3–3–2–2 | 415 | 81.20 |
| 100–100–50–50 | 4–4–2–2 | 425 | 97.60 |
| 100–100–80–80 | 4–4–3–3 | 435 | 100.30 |
| 125–125–100–100 | 5–5–4–4 | 445 | 128.70 |
| 150–150–125–125 | 6–6–5–5 | 455 | 186.70 |

# BENDS



**STANDARD 45°**

| mm | Inches | Code | Price |
|---|---|---|---|
| 50 | 2 | 795 | 54.20 |
| 80 | 3 | 810 | 56.90 |
| 100 | 4 | 815 | 73.20 |
| 125 | 5 | 820 | 89.30 |
| 150 | 6 | 825 | 120.40 |



**STANDARD 90°**

| mm | Inches | Code | Price |
|---|---|---|---|
| 50 | 2 | 675 | 56.90 |
| 80 | 3 | 685 | 65.00 |
| 100 | 4 | 695 | 77.10 |
| 125 | 5 | 705 | 92.10 |
| 150 | 6 | 715 | 123.20 |



**REDUCING 45°**

| mm | Inches | Code | Price |
|---|---|---|---|
| 80-50 | 3–2 | 845 | 119.20 |
| 100- 80 | 4–3 | 855 | 143.50 |
| 125-100 | 5–4 | 865 | 165.30 |
| 150-125 | 6–5 | 875 | 192.20 |



**Reducing 90°**

| mm | Inches | Code | Price |
|---|---|---|---|
| 80-50 | 3-2 | 745 | 150.30 |
| 100-50 | 4-2 | 755 | 170.50 |
| 100-80 | 4-3 | 765 | 181.40 |
| 150-100 | 6-4 | 775 | 406.00 |
| 125-100 | 5-4 | 780 | 196.40 |
| 150-125 | 6-5 | 785 | 235.60 |

# STARTERS



**BSP STARTER**

| mm | Inches | Code | Price |
|---|---|---|---|
| 50-40 BSP | 2-1½ | 1125 | 46.10 |
| 50-50 BSP | 2-2 | 1135 | 54.20 |
| 50-80 BSP | 2-3 | 1145 | 160.40 |
| 80-40 BSP | 3-1½ | 1165 | 69.00 |
| 80-50 BSP | 3-2 | 1175 | 74.60 |
| 80-65 BSP | 3-2½ | 1185 | 83.90 |
| 80-80 BSP | 3-3 | 1190 | 85.30 |
| 80-100 BSP | 3-4 | 1195 | 101.60 |
| 100-40 BSP | 4-1½ | 1205 | 92.10 |
| 100-50 BSP | 4-2 | 1215 | 105.70 |
| 100-65 BSP | 4-2½ | 1225 | 92.10 |
| 100-80 BSP | 4-3 | 1235 | 101.60 |
| 100-100 BSP | 4-4 | 1245 | 104.20 |

# ENDS





**HOSE JOINER (BEAD EACH END)**

| mm | Inches | Code | Price |
|---|---|---|---|
| 50 | 2 | 1035BEE | 24.40 |
| 80 | 3 | 1045BEE | 24.40 |
| 100 | 4 | 1055BEE | 35.20 |
| 125 | 5 | 1065BEE | 42.00 |
| 150 | 6 | 1075BEE | 54.20 |

**HOSE ENDS**

| mm | Inches | Code | Price |
|---|---|---|---|
| 50 | 2 | 1035 | 22.90 |
| 80 | 3 | 1045 | 22.90 |
| 100 | 4 | 1055 | 29.80 |
| 125 | 5 | 1065 | 34.00 |
| 150 | 6 | 1075 | 43.30 |



**STOP ENDS**

| mm | Inches | Code | Price |
|---|---|---|---|
| 50 | 2 | 975 | 27.10 |
| 80 | 3 | 985 | 39.20 |
| 100 | 4 | 995 | 43.30 |
| 125 | 5 | 1005 | 58.20 |
| 150 | 6 | 1010 | 78.60 |

# GENERAL DIMENSIONS

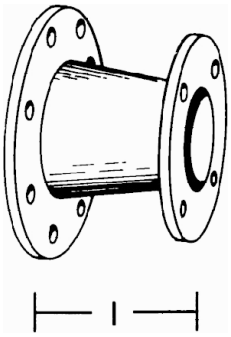


GALVANISED TAPERS

| mm | inches | Light Wall L (mm) | Med Wall L (mm) | Heavy Duty L (mm) |
|---|---|---|---|---|
| 40 – 80 | 1 ½ - 3 | 160 | - | 89 |
| 50 – 80 | 2 – 3 | 160 | 111 | 89 |
| 50 – 100 | 2 – 4 | 160 | 124 | 102 |
| 65 – 80 | 2 ½ - 3 | 160 | 111 | 89 |
| 80 – 100 | 3 – 4 | 160 | 124 | 102 |
| 80 – 125 | 3 – 5 | 160 | 149 | 127 |
| 80 – 150 | 3 – 6 | 160 | 162 | 140 |
| 100 – 125 | 4 – 5 | 160 | 149 | 127 |
| 100 – 150 | 4 – 6 | 160 | 162 | 140 |
| 125 – 150 | 5 – 6 | 160 | 160 | 140 |
| 125 – 200 | 5 – 8 | 220 | 174 | 152 |
| 150 – 200 | 6 – 8 | 220 | 174 | 152 |
| 200 – 250 | 8 – 10 | 220 | - | 178 |
| 200 - 300 | 44903 | 220 | - | 203 |

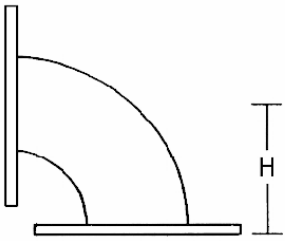


GALVANISED 90° BENDS

| mm | inches | Light Wall H (mm) | Med Wall H (mm) | Heavy Duty H (mm) |
|---|---|---|---|---|
| 80 | 3 | 124 | 124 | 114 |
| 100 | 4 | 210 | 162 | 152 |
| 125 | 5 | 250 | 200 | 190 |
| 150 | 6 | 290 | 240 | 230 |
| 200 | 8 | 302 | 317 | 305 |
| 250 | 10 | 385 | - | 385 |
| 300 | 12 | 457 | - | 457 |


Rodney Industries
REAL PEOPLE
REAL PRODUCTS
REAL SOLUTIONS



# FLOATS & PONTOONS

## ENGINEERED FOR STABILITY AND PERFORMANCE

With a wide range of standard sizes available, Rodney Industries offers Australian-made floats and pontoons built for tough local conditions. And if standard doesn't suit, our Sales and Design Team can customise to your needs.

Features Include:

- Single or double float designs Variations on standard sizes available
- Metal-ferruled tethering lugs to prevent cable cutting/ sawing
- Adjustable sled to match the batter (slope) angle of ponds, dams and rivers
- Compatible with suction lines, footvalves and submersible pumps

# FLOATS & PONTOONS





### FLOATS - SINGLE

| Size | | | | |
|---|---|---|---|---|
| DIA | Length | Load Capacity | Code | Price |
| 160 | 1500 | 15 kg | F1601500 | 553.80 |
| 200 | 1000 | 15 kg | F2001000 | 622.60 |
| 200 | 1500 | 21 kg | F2001500 | 638.50 |
| 200 | 2000 | 29 kg | F2002000 | 656.30 |
| 250 | 1500 | 34 kg | F2501500 | 760.30 |
| 315 | 1500 | 53 kg | F3151500 | 917.00 |
| 315 | 2000 | 71 kg | F3152000 | 1,003.40 |
| 315 | 2500 | 89 kg | F3152500 | 1,044.90 |
| 315 | 3000 | 106 kg | F3153000 | 1,086.70 |
| 355 | 2500 | 112 kg | F3552500 | 1,496.10 |
| 355 | 3000 | 135kg | F3553000 | 1,561.80 |



*Five lugs included on 160mm floats

### FLOATS - DOUBLE

| Size | | | | |
|---|---|---|---|---|
| DIA | Length | Load Capacity | Code | Price |
| 200 | 1500 | 43kg | FD2001500 | 1,979.30 |
| 200 | 2000 | 57kg | FD2002000 | 3,307.30 |
| 250 | 2500 | 111 kg | FD2502500 | 3,406.60 |
| 250 | 3000 | 134 kg | FD2503000 | 3,493.20 |
| 315 | 2500 | 177 kg | FD3152500 | 4,168.30 |
| 315 | 3000 | 250 kg | FD3153000 | 4,254.60 |
| 355 | 2500 | 225 kg | FD3552500 | 5,077.10 |
| 355 | 3000 | 269 kg | FD3553000 | 5,249.90 |
| 400 | 2500 | 285 kg | FD4002500 | 6,208.40 |
| 450 | 3000 | 433 kg | FD4503000 | 7,291.30 |



### FLOAT DOUBLE C/W SUCTION PIPE CRADLE - FOAM FILLED

| Size | | | | Code | Price |
|---|---|---|---|---|---|
| DIA | Length | Suction Pipe Cradle Size | Load Capacity | | |
| 125 | 2000 | 200 | 21 kg | FD1252000FF200 | 2,271.00 |
| 160 | 1200 | 125 | 21 kg | FD1601200FF125 | 1,531.00 |
| 160 | 1200 | 160 | 21 kg | FD1601200FF160 | 1,710.00 |
| 160 | 1200 | 180 | 21 kg | FD1601200FF180 | 1,813.00 |
| 160 | 1200 | 200 | 21 kg | FD1601200FF200 | 2,018.00 |
| 160 | 1200 | 225 | 21 kg | FD1601200FF225 | 2,070.00 |
| 160 | 1200 | 250 | 21 kg | FD1601200FF250 | 2,120.00 |
| 250 | 1200 | 315 | 52 kg | FD2501200FF315 | 3,228.00 |
| 250 | 1200 | 355 | 52 kg | FD2501200FF355 | 3,434.00 |
| 355 | 2000 | 355 | 220 kg | FD3552000FF355 | 4,500.00 |

# PUMP PONTOONS



## HASSLE FREE PUMP HANDLING & PROTECTION

Built from the ground up to be the most adaptable, unmanned floating structures. All of the UAT modular flotation systems support an enormous range of pumps (up to 5 tonne).

Multiple configurations are available with all designs being immensely robust. With the ability to package down into an extremely compact form factor, moving and storing the units is particularly easy. UAT's interchangeable component design will allow you to customise and grow your structure to suit your future needs.

Custom built for both submersible and surface pumps, these pump floats are made to last.

Complete protection for all of your pumps:

- Tough and durable
- A truly modular concept – all modules are interchangeable in a 'snap together' configuration
- Chemical resistant construction
- Handling advantages and options include Crane, Dozer, Excavator, Truck, Trailer, Workshop
- Efficient storage (small footprint and stackable)
- Easy to handle and manoeuvre

## WHO IS IT FOR?

With proven designs to safely and easily position, handle and manoeuvre submersible pumps from 50kg to 5,000kg, we protect your most valuable assets.

For use in:

- Mining
- Utilities and Wastewater Treatment Plants
- Wastewater Ponds, Lagoons and Tanks
- Agribusiness, Feedlots, Piggeries, Dairies
- Abattoirs
- Heavy Industry
- Refineries
- Oil and Gas
- Recreational Water Bodies, Parks and Lakes
- Industry, Pulp and Paper Mills, Starch Factories

# PUMP PONTOONS

| Example Image (actual colour will be BLUE) | Max Pump Weight (Kg) | Pontoon Assembled Weight Excluding Pump (Kg) | Assembled Dimensions L x W x H | Filling | Code | Price |
|---|---|---|---|---|---|---|
|  | 180kg | 95 | 1916 x 1874 x 1341 | Non Foam Filled | SK-300-A | $5,672 |
|  | 120kg | 161 | 2390 x 1874 x 1847 | Non Foam Filled | SK-300-AS | $6,309 |
|  | 450kg | 148 | 1916 x 1874 x 1602 | Non Foam Filled | SK-600-A | $8,450 |
|  | 400kg | 214 | 2390 x 1874 x 2109 | Non Foam Filled | SK-600-AS | $10,302 |
|  | 1800kg | 467 | 2700 x 2260 x 2047 | Non Foam Filled | SK-2000-A | $8,796 |
|  | 1400kg | 750 | 2796 x 2260 x 3070 | Non Foam Filled | SK-2000-AS | $26,044 |
|  | 1800kg | 467 | 2700 x 2260 x 2047 | Foam Filled | SK-2000-A-FF | $19,678 |
|  | 1400kg | 750 | 2796 x 2260 x 3070 | Foam Filled | SK-2000-AS-L-FF | $30,096 |

* Actual colour will be blue



# POLYETHYLENE FITTINGS

## LIGHTWEIGHT STRENGTH FOR DEMANDING ENVIRONMENTS

Rodney Industries offers a comprehensive range of polyethylene fittings designed for durability, reliability and smooth flow performance across irrigation and water transfer systems. Our range includes segmented bends, sweep bends, stub flanges, Maxi Stubs, valve spacers, shouldered ends, moulded bends and tees, junctions, reducers, end caps and backing rings, supported by matching nuts, bolts and gasket kits. Lightweight, corrosion resistant and easy to handle, our poly fittings deliver dependable performance in demanding environments.

# SEGEMENTED BENDS

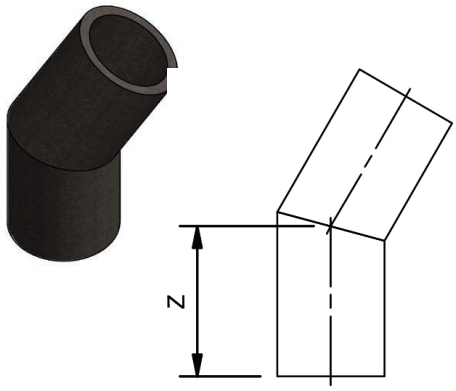


**SEGMENTED BENDS - 30°**

| Size | | Code | Price | Code | Price |
|---|---|---|---|---|---|
| DN | Z | SDR17 | | SDR11 | |
| 250 | 350 | SEG2503017 | 488.30 | SEG2503011 | 563.00 |
| 280 | 363 | SEG2803017 | 557.00 | SEG2803011 | 660.20 |
| 315 | 428 | SEG3153017 | 670.20 | SEG3153011 | 815.60 |
| 355 | 443 | SEG3553017 | 790.40 | SEG3553011 | 979.10 |
| 400 | 461 | SEG4003017 | 1,000.20 | SEG4003011 | 1,249.50 |
| 450 | 481 | SEG4503017 | 1,267.90 | SEG4503011 | 1,597.30 |
| 500 | 551 | SEG5003017 | 1,597.30 | SEG5003011 | 2,069.50 |
| 560 | 575 | SEG5603017 | 1,910.70 | SEG5603011 | 2,526.10 |
| 630 | 603 | SEG6303017 | 1,732.30 | SEG6303011 | 3,279.50 |
| 710 | 635 | SEG7103017 | 3,249.40 | SEG7103011 | 2,543.00 |
| 800 | 671 | SEG8003017 | 3,604.90 | SEG8003011 | 3,718.50 |



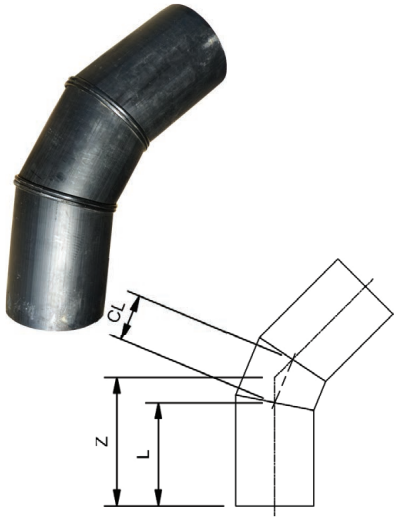


**SEGMENTED BENDS - 45°**

| Size | | | | Code | Price | Code | Price |
|---|---|---|---|---|---|---|---|
| DN | Z | L | CL | SDR17 | | SDR11 | |
| 250 | 412 | 330 | 150 | SEG2504517 | 830.60 | SEG2504511 | 922.80 |
| 280 | 474 | 383 | 167 | SEG2804517 | 1,275.80 | SEG2804511 | 1,392.60 |
| 315 | 498 | 395 | 190 | SEG3154517 | 1,479.50 | SEG3154511 | 1,657.00 |
| 355 | 520 | 406 | 211 | SEG3554517 | 1,701.70 | SEG3554511 | 1,991.50 |
| 400 | 548 | 420 | 238 | SEG4004517 | 2,123.20 | SEG4004511 | 2,438.30 |
| 450 | 580 | 435 | 270 | SEG4504517 | 2,541.00 | SEG4504511 | 2,938.10 |
| 500 | 665 | 501 | 306 | SEG5004517 | 3,018.80 | SEG5004511 | 3,593.80 |
| 560 | 698 | 517 | 334 | SEG5604517 | 3,541.80 | SEG5604511 | 4,312.00 |
| 630 | 741 | 538 | 375 | SEG6304517 | 2,638.60 | SEG6304511 | 5,202.30 |
| 710 | 791 | 582 | 428 | SEG7104517 | 3,625.50 | SEG7104511 | 3,741.20 |
| 800 | 847 | 611 | 455 | SEG8004517 | 5,476.40 | SEG8004511 | 5,767.60 |

*Please note:* *De-ration of our range of fabricated polyethylene fittings must be taken into account when designing a pipe system.*

# SEGEMENTED BENDS

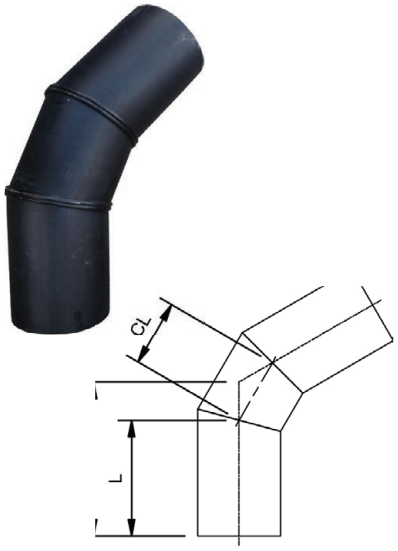


**SEGMENTED BENDS - 60°**

| Size | | | | Code | Price | Code | Price |
|---|---|---|---|---|---|---|---|
| DN | Z | L | CL | SDR17 | | SDR11 | |
| 250 | 466 | 350 | 201 | SEG2506017 | 851.80 | SEG2506011 | 986.20 |
| 280 | 492 | 363 | 225 | SEG2806017 | 1,354.90 | SEG2806011 | 1,508.60 |
| 315 | 576 | 428 | 256 | SEG3156017 | 1,512.10 | SEG3156011 | 1,705.20 |
| 355 | 608 | 443 | 286 | SEG3556017 | 1,783.40 | SEG3556011 | 2,052.90 |
| 400 | 646 | 461 | 322 | SEG4006017 | 2,230.30 | SEG4006011 | 2,597.40 |
| 450 | 689 | 481 | 362 | SEG4506017 | 2,769.20 | SEG4506011 | 3,279.50 |
| 500 | 783 | 551 | 402 | SEG5006017 | 3,269.70 | SEG5006011 | 3,964.20 |
| 560 | 835 | 575 | 450 | SEG5606017 | 3,958.10 | SEG5606011 | 4,776.20 |
| 630 | 896 | 603 | 506 | SEG6306017 | 2,669.20 | SEG6306011 | 6,086.30 |
| 710 | 965 | 635 | 570 | SEG7106017 | 4,386.20 | SEG7106011 | 5,570.50 |
| 800 | 1043 | 671 | 643 | SEG8006017 | 5,962.30 | SEG8006011 | 7,295.40 |

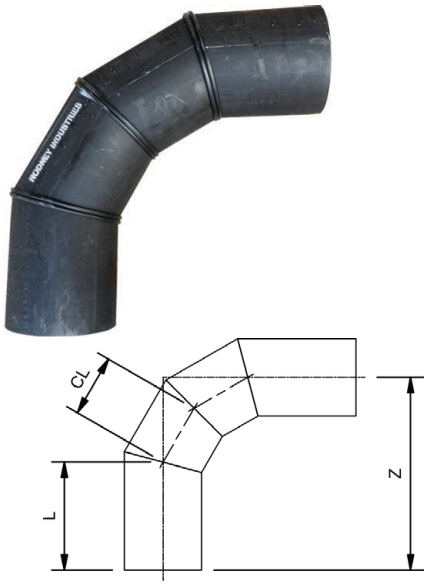


**SEGMENTED BENDS - 90°**

| Size | | | | Code | Price | Code | Price |
|---|---|---|---|---|---|---|---|
| DN | Z | L | CL | SDR17 | | SDR11 | |
| 250 | 625 | 350 | 201 | SEG2509017 | 1,584.80 | SEG2509011 | 1,716.60 |
| 280 | 670 | 363 | 225 | SEG2809017 | 1,777.90 | SEG2809011 | 1,958.90 |
| 315 | 778 | 428 | 256 | SEG3159017 | 1,983.40 | SEG3159011 | 2,225.00 |
| 355 | 833 | 443 | 286 | SEG3559017 | 2,405.90 | SEG3559011 | 2,735.10 |
| 400 | 900 | 461 | 322 | SEG4009017 | 2,936.10 | SEG4009011 | 3,407.70 |
| 450 | 975 | 481 | 362 | SEG4509017 | 3,507.80 | SEG4509011 | 4,134.60 |
| 500 | 1100 | 551 | 402 | SEG5009017 | 4,301.40 | SEG5009011 | 5,450.00 |
| 560 | 1190 | 575 | 450 | SEG5609017 | 5,219.70 | SEG5609011 | 6,760.60 |
| 630 | 1295 | 603 | 506 | SEG6309017 | 3,380.10 | SEG6309011 | 7,688.80 |
| 710 | 1414 | 635 | 570 | SEG7109017 | 5,236.80 | SEG7109011 | 5,964.00 |
| 800 | 1550 | 671 | 643 | SEG8009017 | 7,715.70 | SEG8009011 | 10,242.40 |

*Please note:* *De-ration of our range of fabricated polyethylene fittings must be taken into account when designing a pipe system.*

# SWEEP BENDS





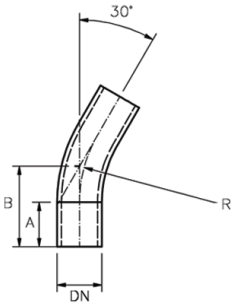


## SWEEP BENDS - 30°

| Size | | | | Code | Price | Code | Price |
|---|---|---|---|---|---|---|---|
| DN | B | A | R | SDR17 | | SDR11 | |
| 63 | 114 | 63 | 189 | SW0633017 | 108.00 | SW0633011 | 109.80 |
| 75 | 135 | 75 | 225 | SW0753017 | 114.90 | SW0753011 | 116.70 |
| 90 | 162 | 90 | 270 | SW0903017 | 116.70 | SW0903011 | 122.70 |
| 110 | 198 | 110 | 330 | SW1103017 | 163.70 | SW1103011 | 167.90 |
| 125 | 225 | 125 | 375 | SW1253017 | 209.90 | SW1253011 | 220.40 |
| 140 | 266 | 140 | 470 | SW1403017 | 261.30 | SW1403011 | 274.30 |
| 160 | 289 | 160 | 480 | SW1603017 | 313.70 | SW1603011 | 334.20 |
| 180 | 338 | 180 | 590 | SW1803017 | 372.60 | SW1803011 | 402.80 |
| 200 | 361 | 200 | 600 | SW2003017 | 431.00 | SW2003011 | 471.30 |
| 225 | 406 | 225 | 675 | SW2253017 | 483.10 | SW2253011 | 557.70 |
| 250 | 451 | 250 | 750 | SW2503017 | 587.70 | SW2503011 | 664.80 |
| 280 | 505 | 280 | 840 | SW2803017 | 969.90 | SW2803011 | 1,383.10 |
| 315 | 568 | 315 | 945 | SW3153017 | 1,252.10 | SW3153011 | 1,677.50 |
| 355 | 640 | 355 | 1065 | SW3553017 | 2,030.60 | SW3553011 | 3,051.70 |



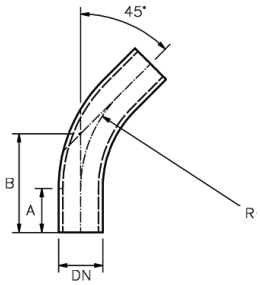


## SWEEP BENDS - 45°

| Size | | | | Code | Price | Code | Price |
|---|---|---|---|---|---|---|---|
| DN | B | A | R | SDR17 | | SDR11 | |
| 63 | 141 | 63 | 189 | SW0634517 | 109.80 | SW0634511 | 111.60 |
| 75 | 168 | 75 | 225 | SW0754517 | 116.70 | SW0754511 | 118.40 |
| 90 | 202 | 90 | 270 | SW0904517 | 118.40 | SW0904511 | 124.20 |
| 110 | 247 | 110 | 330 | SW1104517 | 165.30 | SW1104511 | 173.20 |
| 125 | 280 | 125 | 375 | SW1254517 | 216.00 | SW1254511 | 229.70 |
| 140 | 335 | 140 | 470 | SW1404517 | 266.50 | SW1404511 | 283.80 |
| 160 | 359 | 160 | 480 | SW1604517 | 322.90 | SW1604511 | 345.30 |
| 180 | 424 | 180 | 590 | - | - | SW1804511 | 421.50 |
| 200 | 449 | 200 | 600 | SW2004517 | 448.10 | SW2004511 | 566.40 |
| 225 | 505 | 225 | 675 | SW2254517 | 497.70 | SW2254511 | 585.90 |
| 250 | 561 | 250 | 750 | SW2504517 | 617.50 | SW2504511 | 707.60 |
| 280 | 628 | 280 | 840 | SW2804517 | 969.90 | SW2804511 | 1,383.10 |
| 315 | 706 | 315 | 945 | SW3154517 | 1,252.10 | SW3154511 | 1,677.50 |
| 355 | 796 | 355 | 1065 | SW3554517 | 2,030.60 | SW3554511 | 3,051.70 |

*Please note:* The above dimensions are provided as a guide only. Accuracy of the above data is not guaranteed and dimensions may change without notice.



*Hard Back Sweep Bends available upon request.*
*Contact our Sales Department for more information and pricing.*

# SWEEP BENDS



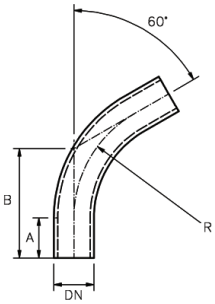


## SWEEP BENDS - 60°

| Size | | | | Code | Price | Code | Price |
|---|---|---|---|---|---|---|---|
| DN | B | A | R | SDR17 | | SDR11 | |
| 63 | 172 | 63 | 189 | SW0636017 | 109.80 | SW0636011 | 111.60 |
| 75 | 205 | 75 | 225 | SW0756017 | 116.70 | SW0756011 | 118.40 |
| 90 | 246 | 90 | 270 | SW0906017 | 118.40 | SW0906011 | 126.80 |
| 110 | 301 | 110 | 330 | SW1106017 | 169.70 | SW1106011 | 176.60 |
| 125 | 342 | 125 | 375 | SW1256017 | 220.40 | SW1256011 | 233.00 |
| 140 | 411 | 140 | 470 | SW1406017 | 271.60 | SW1406011 | 293.20 |
| 160 | 437 | 160 | 480 | SW1606017 | 329.90 | SW1606011 | 358.10 |
| 180 | 521 | 180 | 590 | SW1806017 | 399.40 | SW1806011 | 442.80 |
| 200 | 546 | 200 | 600 | SW2006017 | 462.50 | SW2006011 | 519.20 |
| 225 | 615 | 225 | 675 | SW2256017 | 519.20 | SW2256011 | 621.90 |
| 250 | 683 | 250 | 750 | SW2506017 | 649.20 | SW2506011 | 754.60 |
| 280 | 765 | 280 | 840 | SW2806017 | 960.20 | SW2806011 | 1,662.40 |
| 315 | 861 | 315 | 945 | SW3156017 | 1,240.40 | SW3156011 | 2,043.30 |
| 355 | 970 | 355 | 1065 | SW3556017 | 2,011.00 | SW3556011 | 3,017.30 |



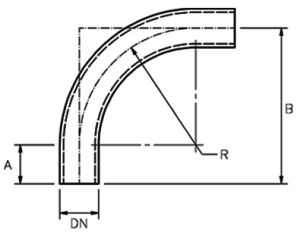


## SWEEP BENDS - 90°

| Size | | | | Code | Price | Code | Price |
|---|---|---|---|---|---|---|---|
| DN | B | A | R | SDR17 | | SDR11 | |
| 63 | 252 | 63 | 189 | SW0639017 | 109.80 | SW0639011 | 113.00 |
| 75 | 300 | 75 | 225 | SW0759017 | 118.40 | SW0759011 | 122.70 |
| 90 | 360 | 90 | 270 | SW0909017 | 124.20 | SW0909011 | 132.10 |
| 110 | 440 | 110 | 330 | SW1109017 | 173.20 | SW1109011 | 184.20 |
| 125 | 500 | 125 | 375 | SW1259017 | 227.10 | SW1259011 | 247.70 |
| 140 | 610 | 140 | 470 | SW1409017 | 287.00 | SW1409011 | 313.70 |
| 160 | 640 | 160 | 480 | SW1609017 | 349.60 | SW1609011 | 384.60 |
| 180 | 770 | 180 | 590 | - | - | SW1809011 | 483.10 |
| 200 | 800 | 200 | 600 | SW2009017 | 496.00 | SW2009011 | 568.10 |
| 225 | 900 | 225 | 675 | SW2259017 | 557.70 | SW2259011 | 694.80 |
| 250 | 1000 | 250 | 750 | SW2509017 | 719.50 | SW2509011 | 857.60 |
| 280 | 1120 | 280 | 840 | SW2809017 | 1,121.10 | SW2809011 | 1,662.40 |
| 315 | 1260 | 315 | 945 | SW3159017 | 1,464.80 | SW3159011 | 2,043.30 |
| 355 | 1420 | 355 | 1065 | SW3559017 | 2,063.90 | SW3559011 | 3,017.30 |

*Please note:* The above dimensions are provided as a guide only. Accuracy of the above data is not guaranteed and dimensions may change without notice.

# STUB FLANGES





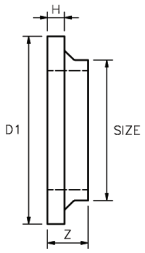


## STUB FLANGE - SHORT SPIGOT

| Size | | | | Code | Price | Code | Price |
|---|---|---|---|---|---|---|---|
| mm | D1 | Z | H | SDR17 | | SDR11 | |
| 63 | 96 | 50 | 14 | SF06317 | 11.30 | SF06311 | 11.30 |
| 75 | 108 | 50 | 14 | SF07517 | 12.50 | SF07511 | 12.50 |
| 90 | 128 | 60 | 14 | SF09017 | 15.40 | SF09011 | 12.50 |
| 110 | 160 | 60 | 14 | SF11017 | 19.70 | SF11011 | 19.70 |
| 125 | 192 | 65 | 25 | SF12517 | 23.70 | SF12511 | 23.70 |
| 140 | 192 | 65 | 25 | SF14017 | 36.30 | SF14011 | 52.90 |
| 160 | 217 | 65 | 25 | SF16017 | 34.90 | SF16011 | 32.20 |
| 180 | 274 | 75 | 25 | SF18017 | 52.90 | SF18011 | 52.90 |
| 200 | 274 | 75 | 25 | SF20017 | 58.50 | SF20011 | 68.30 |
| 225 | 274 | 75 | 25 | SF22517 | 64.00 | SF22511 | 79.30 |
| 250 | 334 | 80 | 30 | SF25017 | 94.70 | SF25011 | 91.80 |
| 280 | 334 | 80 | 30 | SF28017 | 103.10 | SF28011 | 103.10 |
| 315 | 380 | 80 | 30 | SF31517 | 122.50 | SF31511 | 143.40 |
| 355 | 444 | 90 | 40 | SF35517 | 155.90 | SF35511 | 192.10 |
| 400 | 495 | 90 | 40 | SF40017 | 199.00 | SF40011 | 271.50 |
| 450 | 545 | 90 | 40 | SF45017 | 258.80 | SF45011 | 457.70 |
| 500 | 602 | 105 | 50 | SF50017 | 336.70 | SF50011 | 477.30 |
| 560 | 657 | 105 | 55 | SF56017 | 477.30 | SF56011 | 513.30 |
| 630 | 714 | 105 | 55 | SF63017 | 525.90 | SF63011 | 615.00 |



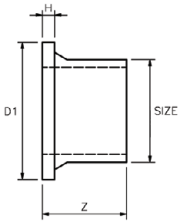


## STUB FLANGE - LONG SPIGOT

| Size | | | | Code | Price | Code | Price |
|---|---|---|---|---|---|---|---|
| mm | D1 | Z | H | SDR17 | | SDR11 | |
| 63 | 96 | 91 | 14 | SF06317EF | 11.30 | SF06311EF | 11.30 |
| 75 | 108 | 96 | 14 | SF07517EF | 12.50 | SF07511EF | 12.50 |
| 90 | 128 | 106 | 14 | SF09017EF | 15.40 | SF09011EF | 15.40 |
| 110 | 160 | 116 | 14 | SF11017EF | 20.90 | SF11011EF | 20.90 |
| 125 | 192 | 126 | 25 | SF12517EF | 25.10 | SF12511EF | 28.00 |
| 140 | 192 | 132 | 25 | SF14017EF | 36.30 | SF14011EF | 39.00 |
| 160 | 217 | 142 | 25 | SF16017EF | 39.00 | SF16011EF | 43.20 |
| 180 | 274 | 157 | 25 | SF18017EF | 58.50 | SF18011EF | 58.50 |
| 200 | 274 | 157 | 25 | SF20017EF | 72.40 | SF20011EF | 79.30 |
| 225 | 274 | 200 | 25 | SF22517EF | 80.80 | SF22511EF | 80.80 |
| 250 | 334 | 205 | 30 | SF25017EF | 118.30 | SF25011EF | 136.30 |
| 280 | 334 | 280 | 30 | SF28017EF | 210.00 | SF28011EF | 160.20 |
| 315 | 444 | 280 | 30 | SF31517EF | 199.00 | SF31511EF | 211.50 |
| 355 | 495 | 290 | 40 | SF35517EF | 325.80 | SF35511EF | 350.10 |
| 400 | 545 | 290 | 40 | SF40017EF | 449.40 | SF40011EF | 637.70 |

# MAXI STUBS

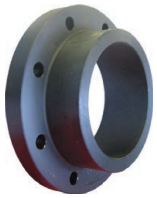

Note: Standard Maxi Stub - SDR 11 PE100 drilled to suit Table D backing ring. Other sizes available upon application.

### MAXI STUB SHORT SPIGOT

| Size | | | | Code | Price |
|---|---|---|---|---|---|
| Pipe ø | inches | mm | OD | | |
| 125 | 4 | 100 | 215 | MX412511D | 36.80 |
| 160 | 5 | 125 | 225 | MX516011D | 51.70 |
| 180 | 6 | 150 | 280 | MX618011D | 59.80 |
| 200 | 6 | 150 | 280 | MX620011D | 165.20 |
| 225 | 8 | 200 | 335 | MX822511D | 427.70 |
| 250 | 8 | 200 | 335 | MX825011D | 126.30 |
| 280 | 9 | 225 | 370 | MX928011D | 245.50 |
| 280 | 10 | 250 | 405 | MX1028011D | 173.80 |
| 315 | 10 | 250 | 405 | MX1031511D | 230.70 |
| 355 | 12 | 300 | 455 | MX1235511D | 286.70 |



### MAXI STUB LONG SPIGOT SUITABLE FOR ELECTROFUSION OR BUTTWELDING

| Size | | | | Code | Price |
|---|---|---|---|---|---|
| Pipe Ø | inches | mm | OD | | |
| 125 | 4 | 100 | 215 | MX412511DEF | 52.80 |
| 180 | 6 | 150 | 280 | MX618011DEF | 76.90 |
| 250 | 8 | 200 | 335 | MX825011DEF | 133.10 |
| 315 | 10 | 250 | 405 | MX1031511DEF | 257.60 |
| 355 | 12 | 300 | 455 | MX1235511DEF | 315.40 |



### BACKING RING TO SUIT MAXI STUB

| Size | | | | |
|---|---|---|---|---|
| Backing Ring | To Suit Maxi | Pipe | Code | Price |
| mm | inches | mm | | |
| 100 | 4 | 125 | BRX4140D | 57.40 |
| 125 | 5 | 160 | BRX5160D | 92.30 |
| 150 | 6 | 200 | BRX6200D | 24.10 |
| 200 | 8 | 250 | BRX8250D | 47.10 |
| 225 | 9 | 280 | BRX9280D | 119.40 |
| 250 | 10 | 315 | BRX10315D | 54.00 |
| 300 | 12 | 355 | BRX12355D | 140.00 |



### MAXI STUB ASSEMBLY COMPLETE WITH STAINLESS STEEL 316 BACKING RING

| Size | | | | Code | Price |
|---|---|---|---|---|---|
| Pipe Ø | inches | mm | OD | | |
| 125 | 4 | 100 | 215 | MX412511EFASSY | 125.70 |
| 180 | 6 | 150 | 280 | MX618011EFASSY | 194.40 |
| 200 | 6 | 150 | 280 | MX620011EFASSY | 373.60 |
| 225 | 8 | 200 | 335 | MX822511EFASSY | 682.40 |
| 250 | 8 | 200 | 335 | MX825011EFASSY | 305.10 |
| 280 | 9 | 225 | 370 | MX928011EFASSY | 482.60 |
| 315 | 10 | 250 | 405 | MX1031511EFASSY | 471.90 |
| 355 | 12 | 300 | 455 | MX1235511EFASSY | 582.90 |

# SPACERS AND SHOULDERED ENDS





### STUB FLANGE - CHAMFERED FOR BUTTERFLY VALVE SDR11

| Size | Code | Price |
|---|---|---|
| 110 | SF11011EFBV | 44.70 |
| 160 | SF16011EFBV | 65.70 |
| 200 | SF20011EFBV | 115.40 |
| 225 | SF22511EFBV | 115.40 |
| 250 | SF25011EFBV | 189.40 |
| 280 | SF28011EFBV | 193.70 |
| 315 | SF31511EFBV | 307.50 |



### VALVE SPACER - WAFER STYLE

| Size | | | | | | | |
|---|---|---|---|---|---|---|---|
| Pipe OD | Spacer OD | ID-1 | ID-2 | THK | Angle | Code | Price |
| 110 | 160 | 89 | 99 | 14 | 20 | VSW11011 | 8.80 |
| 125 | 192 | 102 | 125 | 25 | 25 | VSW12511 | 20.50 |
| 140 | 192 | 114 | 132 | 25 | 20 | VSW14011 | 20.50 |
| 160 | 213 | 130 | 153 | 25 | 25 | VSW16011 | 20.50 |
| 200 | 270 | 163 | 209 | 40 | 30 | VSW20011 | 48.20 |
| 225 | 270 | 183 | 206 | 25 | 25 | VSW22511 | 29.20 |
| 250 | 334 | 203 | 259 | 60 | 25 | VSW25011 | 108.10 |
| 280 | 334 | 228 | 263 | 30 | 30 | VSW28011 | 61.40 |
| 315 | 380 | 256 | 325 | 60 | 30 | VSW31511 | 137.50 |
| 355 | 444 | 289 | 358 | 60 | 30 | VSW35511 | 179.80 |
| 400 | 495 | 325 | 418 | 100 | 25 | VSW40011 | 260.00 |
| 450 | 545 | 366 | 459 | 100 | 25 | VSW45011 | 409.10 |
| 500 | 602 | 407 | 500 | 100 | 25 | VSW50011 | 482.10 |



### SHOULDERED ENDS

| Size | Code | Price | Code | Price |
|---|---|---|---|---|
| | SDR17 | | SDR11 | |
| 90 | SE09017 | 23.70 | SE09011 | 23.70 |
| 90 | SE09017EF | 23.70 | SE09011EF | 23.70 |
| 110 | SE11017 | 25.10 | SE11011 | 25.10 |
| 110 | SE11017EF | 28.00 | SE11011EF | 28.00 |
| 160 | SE16017 | 39.00 | SE16011 | 39.00 |
| 160 | SE16017EF | 47.50 | SE16011EF | 47.50 |
| 200 | SE20017 | 91.80 | SE20011 | 91.80 |
| 225 | SE22517 | 98.90 | SE22511 | 98.90 |

Note: EF Codes represent Long Spigot Shouldered Ends. Not suitable for Electrofusion.

# NUTS BOLTS AND GASKETS KITS



**NUTS, BOLTS AND GASKET KITS**

| Gasket Size mm | Nut & Bolt Qty | Washer Qty | Code | Price |
|---|---|---|---|---|
| 63 | 4 | 8 | GK063D | 61.40 |
| 75 | 4 | 8 | GK075D | 61.40 |
| 90 | 4 | 8 | GK090D | 68.10 |
| 110 | 4 | 8 | GK110D | 73.90 |
| 125 | 8 | 16 | GK125D | 92.10 |
| 140 | 8 | 16 | GK140D | 92.10 |
| 160 | 8 | 16 | GK160D | 92.10 |
| 180 | 8 | 16 | GK180D | 105.80 |
| 200 | 8 | 16 | GK200D | 105.80 |
| 225 | 8 | 16 | GK225D | 105.80 |
| 250 | 8 | 16 | GK250D | 133.00 |
| 280 | 12 | 24 | GK280D | 133.00 |
| 315 | 12 | 24 | GK315D | 176.00 |
| 355 | 12 | 24 | GK355D | 265.40 |
| 400 | 12 | 24 | GK400D | 268.80 |
| 450 | 12 | 24 | GK450D | 268.80 |
| 500 | 16 | 32 | GK500D | 363.00 |
| 560 | 16 | 32 | GK560D | 153.60 |
| 630 | 16 | 32 | GK630D | 1,013.60 |
| 710 | 16 | 32 | GK710D | 181.60 |

# MOULDED BENDS





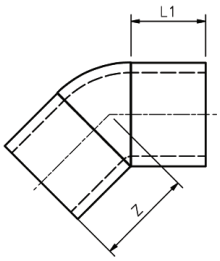


### ELBOWS 45° MOULDED - BW & EF

| Size | | | Code | Price | Code | Price |
|---|---|---|---|---|---|---|
| mm | L1 | Z | SDR17 | | SDR11 | |
| 75 | 80 | 124 | ELB0754517EF | 16.80 | ELB0754511EF | 16.80 |
| 90 | 85 | 136 | ELB0904517EF | 20.90 | ELB0904511EF | 20.90 |
| 110 | 87 | 145 | ELB1104517EF | 32.20 | ELB1104511EF | 32.20 |
| 125 | 87 | 150 | ELB1254517EF | 39.00 | ELB1254511EF | 39.00 |
| 160 | 98 | 175 | ELB1604517EF | 66.80 | ELB1604511EF | 66.80 |
| 180 | 105 | 183 | ELB1804517EF | 83.50 | ELB1804511EF | 83.50 |
| 200 | 110 | 193 | ELB2004517EF | 103.10 | ELB2004511EF | 105.70 |
| 225 | 125 | 215 | ELB2254517EF | 166.90 | ELB2254511EF | 179.60 |
| 250 | 130 | 232 | ELB2504517EF | 203.20 | ELB2504511EF | 243.50 |
| 280 | 140 | 250 | ELB2804517EF | 261.50 | ELB2804511EF | 293.60 |
| 315 | 150 | 270 | ELB3154517EF | 675.50 | ELB3154511EF | 774.00 |



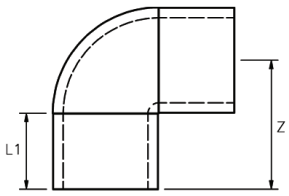


### ELBOWS 90° MOULDED - BW & EF

| Size | | | Code | Price | Code | Price |
|---|---|---|---|---|---|---|
| mm | L1 | Z | SDR17 | | SDR11 | |
| 75 | 75 | 132 | ELB0759017EF | 16.80 | ELB0759011EF | 16.80 |
| 90 | 85 | 150 | ELB0909017EF | 20.90 | ELB0909011EF | 20.90 |
| 110 | 89 | 163 | ELB1109017EF | 32.20 | ELB1109011EF | 32.20 |
| 125 | 90 | 170 | ELB1259017EF | 39.00 | ELB1259011EF | 39.00 |
| 160 | 103 | 200 | ELB1609017EF | 66.80 | ELB1609011EF | 66.80 |
| 180 | 96 | 210 | ELB1809017EF | 83.50 | ELB1809011EF | 83.50 |
| 200 | 104 | 225 | ELB2009017EF | 108.70 | ELB2009011EF | 111.50 |
| 225 | 125 | 265 | ELB2259017EF | 166.90 | ELB2259011EF | 186.50 |
| 250 | 130 | 290 | ELB2509017EF | 239.30 | ELB2509011EF | 253.20 |
| 280 | 140 | 315 | ELB2809017EF | 306.10 | ELB2809011EF | 336.70 |
| 315 | 150 | 355 | ELB3159017EF | 522.20 | ELB3159011EF | 622.30 |

# TEES



## TEES MOULDED - LONG SPIGOT



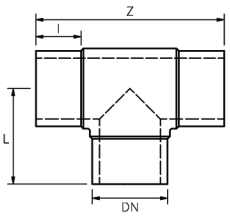


| Size | | | | Code | Price | Code | Price |
|---|---|---|---|---|---|---|---|
| DN | L | Z | I | SDR17 | | SDR11 | |
| 63 | 110 | 220 | 63 | TM06317EF | 19.10 | TM06311EF | 19.70 |
| 75 | 132 | 264 | 75 | TM07517EF | 28.00 | TM07511EF | 20.90 |
| 90 | 150 | 300 | 85 | TM09017EF | 39.00 | TM09011EF | 30.70 |
| 110 | 163 | 326 | 87 | TM11017EF | 55.70 | TM11011EF | 55.70 |
| 125 | 170 | 341 | 87 | TM12517EF | 68.30 | TM12511EF | 68.30 |
| 140 | 190 | 380 | 98 | TM14017EF | 150.30 | TM14011EF | 174.00 |
| 160 | 210 | 400 | 96 | TM16017EF | 115.50 | TM16011EF | 115.50 |
| 180 | 205 | 410 | 96 | TM18017EF | 136.30 | TM18011EF | 136.30 |
| 200 | 225 | 450 | 100 | TM20017EF | 192.10 | TM20011EF | 203.20 |
| 225 | 265 | 530 | 12 | TM22517EF | 299.20 | TM22511EF | 339.50 |
| 250 | 300 | 600 | 130 | TM25017EF | 374.40 | TM25011EF | 480.00 |
| 280 | 315 | 632 | 138 | TM28017EF | 480.00 | TM28011EF | 548.30 |
| 315 | 355 | 710 | 150 | TM31517EF | 605.30 | TM31511EF | 873.60 |
| 355* | 330 | 660 | 110 | TM35517EF | 1,343.70 | TM35511EF | 1,793.20 |

## TEES MOULDED - REDUCING LONG SPIGOT



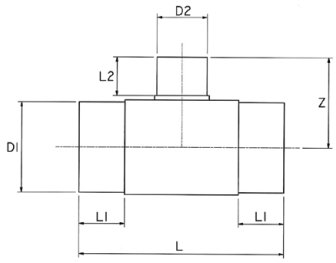


| Size | | | | | | Code | Price | Code | Price |
|---|---|---|---|---|---|---|---|---|---|
| D1 | D2 | L | L1 | L2 | Z | SDR17 | | SDR11 | |
| 110 | 63 | 300 | 85 | 85 | 161 | TMR1106317EF | 60.00 | TMR1106311EF | 62.80 |
| 110 | 75 | 300 | 87 | 85 | 162 | TMR1107517EF | 62.80 | TMR1107511EF | 64.00 |
| 110 | 90 | 300 | 89 | 85 | 162 | TMR1109017EF | 62.80 | TMR1109011EF | 64.00 |
| 160 | 63 | 330 | 91 | 90 | 191 | TMR1606317EF | 142.10 | TMR1606311EF | 147.50 |
| 160 | 75 | 330 | 92 | 90 | 191 | TMR1607517EF | 146.20 | TMR1607511EF | 150.30 |
| 160 | 90 | 330 | 92 | 90 | 189 | TMR1609017EF | 147.50 | TMR1609011EF | 154.60 |
| 160 | 110 | 330 | 91 | 90 | 188 | TMR16011017EF | 151.70 | TMR16011011EF | 155.90 |
| 200 | 110 | 450 | 100 | 85 | 200 | TMR20011017EF | 317.30 | TMR20011011EF | 329.70 |
| 200 | 160 | 450 | 100 | 100 | 450 | TMR20016017EF | 322.80 | TMR20016011EF | 336.70 |
| 250 | 110 | 600 | 130 | 80 | 405 | TMR25011017EF | 484.20 | TMR25011011EF | 536.90 |
| 250 | 160 | 600 | 130 | 100 | 475 | TMR25016017EF | 548.30 | TMR25016011EF | 548.30 |

## TEES - FABRICATED



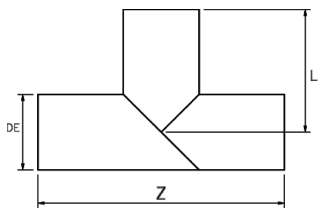


| Size | | | Code | Price | Code | Price |
|---|---|---|---|---|---|---|
| DE | Z | L | SDR17 | | SDR11 | |
| 315 | 760 | 380 | TF31517 | 1,360.70 | TF31511 | 1,516.40 |
| 355 | 800 | 400 | TF35517 | 1,507.70 | TF35511 | 1,799.60 |
| 400 | 960 | 480 | TF40017 | 1,886.40 | TF40011 | 2,344.90 |
| 450 | 1010 | 505 | TF45017 | 2,229.90 | TF45011 | 2,897.30 |
| 500 | 1060 | 530 | TF50017 | 2,581.60 | TF50011 | 3,380.20 |
| 560 | 1190 | 595 | TF56017 | 3,780.70 | TF56011 | 3,838.80 |
| 630 | 1190 | 595 | TF63017 | 4,777.50 | TF63011 | 6,243.30 |

# JUNCTIONS



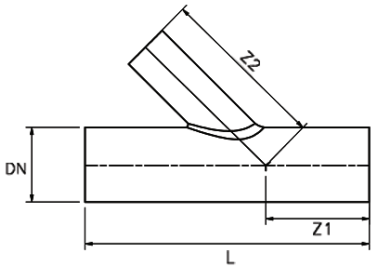


**JUNCTIONS - 45° EQUAL FABRICATED LONG SPIGOT**

| Size | | | | Code | Price | Code | Price |
|---|---|---|---|---|---|---|---|
| DN | L | Z1 | Z2 | SDR17 | | SDR11 | |
| 110 | 700 | 275 | 425 | J1104517 | 144.50 | JF1104511 | 139.00 |
| 125 | 745 | 290 | 455 | J1254517 | 169.00 | J1254511 | 190.10 |
| 160 | 840 | 330 | 510 | J1604517 | 268.90 | J1604511 | 387.90 |
| 200 | 960 | 370 | 590 | J2004517 | 501.80 | J2004511 | 637.40 |
| 225 | 1080 | 425 | 655 | J2254517 | 692.70 | J2254511 | 692.70 |
| 250 | 1155 | 450 | 705 | J2504517 | 1,000.90 | J2504511 | 1,000.90 |
| 280 | 1245 | 490 | 755 | J2804517 | 1,286.20 | J2804511 | 1,286.20 |
| 315 | 1340 | 525 | 815 | J3154517 | 1,617.90 | J3154511 | 1,617.90 |
| 355 | 1455 | 575 | 880 | J3554517 | 2,378.70 | J3554511 | 2,378.70 |
| 400 | 1550 | 600 | 950 | J4004517 | 2,499.60 | J4004511 | 3,024.90 |
| 450 | 1625 | 625 | 1000 | J4504517 | 2,954.20 | J4504511 | 4,042.90 |
| 500 | 1700 | 650 | 1050 | J5004517 | 3,476.60 | J5004511 | 4,391.60 |
| 560 | 1904 | 728 | 1176 | J5604517 | 4,697.90 | J5604511 | 5,988.30 |
| 630 | 2147 | 819 | 1323 | J6304517 | 6,151.40 | J6304511 | 7,986.30 |

# END CAPS



**END CAPS DOMED - LONG SPIGOT***

| Size | Code | Price | Code | Price |
|---|---|---|---|---|
| | SDR17 | | SDR11 | |
| 63 | ECD06317 | 15.40 | ECD06311 | 15.40 |
| 75 | ECD07517 | 15.40 | ECD07511 | 15.40 |
| 90 | ECD09017 | 18.20 | ECD09011 | 18.20 |
| 110 | ECD11017 | 22.40 | ECD11011 | 25.10 |
| 125 | ECD12517 | 29.20 | ECD12511 | 32.20 |
| 140 | ECD14017 | 66.80 | ECD14011 | 66.80 |
| 160 | ECD16017 | 68.30 | ECD16011 | 68.30 |
| 180 | ECD18017 | 69.60 | ECD18011 | 69.60 |
| 200 | ECD20017 | 73.90 | ECD20011 | 83.50 |
| 225 | ECD22517 | 76.70 | ECD22511 | 104.40 |
| 250 | ECD25017 | 79.30 | ECD25011 | 123.90 |
| 280 | ECD28017 | 87.70 | ECD28011 | 162.80 |
| 315 | ECD31517 | 111.50 | ECD31511 | 206.10 |
| 355 | ECD35517 | 125.30 | ECD35511 | 438.30 |
| 400 | ECD40017 | 183.80 | ECD40011 | 623.20 |

* Long spigot not suitable for electrofusion.

# REDUCERS





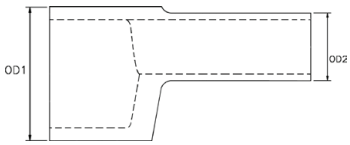


## REDUCERS ECCENTRIC - LONG SPIGOT

| Size | | Code | Price | Code | Price |
|---|---|---|---|---|---|
| OD1 | OD2 | SDR17 | | SDR 11 | |
| 90 | 63 | RE09006317EF | 36.30 | RE09006311EF | 68.80 |
| 90 | 75 | RE09007517EF | 36.30 | RE09007511EF | 39.00 |
| 110 | 63 | RE11006317EF | 48.90 | RE11006311EF | 52.90 |
| 110 | 90 | RE11009017EF | 48.90 | RE11009011EF | 52.90 |
| 125 | 63 | RE12506317EF | 58.50 | RE12506311EF | 64.00 |
| 125 | 90 | RE12509017EF | 58.50 | RE12509011EF | 64.00 |
| 125 | 110 | RE12511017EF | 58.50 | RE12511011EF | 137.80 |
| 140 | 125 | RE14012517EF | 83.50 | RE14012511EF | 91.80 |
| 160 | 90 | RE16009017EF | 114.20 | RE16009011EF | 122.50 |
| 160 | 110 | RE16011017EF | 114.20 | RE16011011EF | 122.50 |
| 160 | 125 | RE16012517EF | 114.20 | RE16012511EF | 122.50 |
| 160 | 140 | RE16014017EF | 114.20 | RE16014011EF | 122.50 |
| 180 | 90 | RE18009017EF | 146.20 | RE18009011EF | 158.60 |
| 180 | 125 | RE18012517EF | 146.20 | RE18012511EF | 158.60 |
| 180 | 160 | RE18016017EF | 146.20 | RE18016011EF | 158.60 |
| 200 | 160 | RE20016017EF | 160.20 | RE20016011EF | 174.00 |
| 200 | 180 | RE20018017EF | 160.20 | RE20018011EF | 174.00 |
| 225 | 160 | RE22516017EF | 257.50 | RE22516011EF | 278.30 |
| 225 | 180 | RE22518017EF | 257.50 | RE22518011EF | 278.30 |
| 225 | 200 | RE22520017EF | 257.50 | RE22520011EF | 278.30 |
| 250 | 200 | RE25020017EF | 338.10 | RE25020011EF | 366.00 |
| 250 | 225 | RE25022517EF | 338.10 | RE25022511EF | 366.00 |



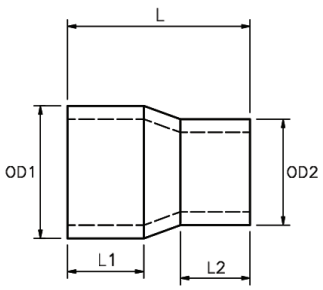


## REDUCERS CONCENTRIC - LONG SPIGOT

| Size | | | | | Code | Price | Code | Price |
|---|---|---|---|---|---|---|---|---|
| OD1 | OD2 | L | I1 | I2 | SDR 17 | | SDR 11 | |
| 75 | 63 | 127 | 61 | 57 | RC07506317EF | 15.40 | RC07506311EF | 15.40 |
| 90 | 63 | 190 | 85 | 75 | RC09006317EF | 20.90 | RC09006311EF | 20.90 |
| 90 | 75 | 145 | 71 | 61 | RC09007517EF | 20.90 | RC09007511EF | 20.90 |
| 110 | 90 | 166 | 83 | 71 | RC11009017EF | 28.00 | RC11009011EF | 28.00 |
| 125 | 63 | 210 | 85 | 85 | RC12506317EF | 34.90 | RC12506311EF | 34.90 |
| 125 | 90 | 182 | 87 | 71 | RC12509017EF | 28.00 | RC12509011EF | 28.00 |
| 125 | 110 | 210 | 105 | 105 | RC12511017EF | 30.70 | RC12511011EF | 30.70 |
| 140 | 125 | 210 | 105 | 105 | RC14012517EF | 47.50 | RC14012511EF | 51.50 |
| 160 | 90 | 320 | 105 | 105 | RC16009017EF | 64.00 | RC16009011EF | 64.00 |
| 160 | 110 | 320 | 115 | 105 | RC16011017EF | 55.70 | RC16011011EF | 58.50 |
| 160 | 125 | 320 | 115 | 105 | RC16012517EF | 55.70 | RC16012511EF | 58.50 |
| 200 | 160 | 360 | 120 | 105 | RC20016017EF | 94.70 | RC20016011EF | 96.00 |

# REDUCERS





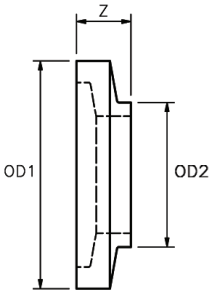


**REDUCERS CONCENTRIC - SHORT SPIGOT**

| Size | | Code | Price | Code | Price |
|---|---|---|---|---|---|
| OD1 | OD2 | SDR17 | | SDR11 | |
| 180 | 125 | RC18012517 | 64.00 | RC18012511 | 66.80 |
| 180 | 160 | RC18016017 | 80.80 | RC18016011 | 80.80 |
| 200 | 110 | RC20011017 | 55.70 | RC20011011 | 55.70 |
| 200 | 140 | RC20014017 | 166.90 | RC20014011 | 174.00 |
| 200 | 160 | RC20016017 | 94.70 | RC20016011 | 96.00 |
| 200 | 180 | RC20018017 | 60.00 | RC20018011 | 98.90 |
| 225 | 140 | RC22514017 | 201.90 | RC22514011 | 211.50 |
| 225 | 160 | RC22516017 | 142.10 | RC22516011 | 158.60 |
| 225 | 180 | RC22518017 | 150.30 | RC22518011 | 158.60 |
| 225 | 200 | RC22520017 | 83.50 | RC22520011 | 83.50 |
| 250 | 160 | RC25016017 | 87.70 | RC25016011 | 87.70 |
| 250 | 200 | RC25020017 | 90.70 | RC25020011 | 90.70 |
| 250 | 225 | RC25022517 | 87.70 | RC25022511 | 87.70 |
| 280 | 200 | RC28020017 | 257.50 | RC28020011 | 267.30 |
| 280 | 225 | RC28022517 | 239.30 | RC28022511 | 242.20 |
| 280 | 250 | RC28025017 | 231.90 | RC28025011 | 243.50 |
| 315 | 200 | RC31520017 | 378.50 | RC31520011 | 397.90 |
| 315 | 225 | RC31522517 | 291.70 | RC31522511 | 306.10 |
| 315 | 250 | RC31525017 | 219.90 | RC31525011 | 230.80 |
| 315 | 280 | RC31528017 | 247.60 | RC31528011 | 325.80 |
| 355 | 200 | RC35520017 | 194.80 | RC35520011 | 803.50 |
| 355 | 250 | RC35525017 | 194.80 | RC35525011 | 392.40 |
| 355 | 280 | RC35528017 | 182.30 | RC35528011 | 303.40 |
| 355 | 315 | RC35531517 | 186.50 | RC35531511 | 424.50 |
| 400 | 200 | RC40020017 | 211.50 | RC40020011 | 994.30 |
| 400 | 250 | RC40025017 | 211.50 | RC40025011 | 1,510.90 |
| 400 | 280 | RC40028017 | 925.60 | RC40028011 | 875.10 |
| 400 | 315 | RC40031517 | 199.00 | RC40031511 | 413.20 |
| 400 | 355 | RC40035517 | 271.50 | RC40035511 | 425.60 |
| 450 | 200 | RC45020017 | 257.50 | RC45020011 | 1,101.80 |
| 450 | 250 | RC45025017 | 265.80 | RC45025011 | 468.00 |
| 450 | 315 | RC45031517 | 265.80 | RC45031511 | 1,082.30 |
| 450 | 355 | RC45035517 | 1,081.80 | RC45035511 | 1,210.60 |
| 450 | 400 | RC45040017 | 896.00 | RC45040011 | 1,082.30 |
| 500 | 315 | RC50031517 | 1,383.60 | RC50031511 | 982.20 |
| 500 | 355 | RC50035517 | 449.40 | RC50035511 | 1,407.90 |
| 500 | 400 | RC50040017 | 466.20 | RC50040011 | 619.20 |
| 500 | 450 | RC50045017 | 517.70 | RC50045011 | 571.80 |
| 560 | 400 | RC56040017 | 517.70 | RC56040011 | 730.50 |
| 560 | 450 | RC56045017 | 517.70 | RC56045011 | 870.80 |
| 630 | 400 | RC63040017 | 1,722.90 | RC63040011 | 4,060.10 |
| 630 | 450 | RC63045017 | 619.20 | RC63045011 | 1,537.20 |

# BACKING RINGS





### BACKING RINGS - TABLE D GALVANISED STEEL

| Size | | | Code | Price |
|---|---|---|---|---|
| Poly pipe OD | Flange Size | THK | | |
| 63 | 50 | 10 | BR063D2 | 14.00 |
| 75 | 65 | 10 | BR075D2 | 15.40 |
| 90 | 80 | 10 | BR090DE | P.O.A |
| 110 | 100 | 10 | BR110D2 | 29.20 |
| 125 | 125 | 13 | BR125D2 | 43.20 |
| 140 | 125 | 13 | BR140D2 | 37.70 |
| 160 | 150 | 13 | BR160D2 | 43.20 |
| 180 | 150 | 13 | BR180D2 | 37.70 |
| 200 | 200 | 13 | BR200D2 | 54.30 |
| 225 | 200 (8") | 13 | BR225D2 | 52.90 |
| 250 | 250 | 16 | BR250D2 | 101.70 |
| 280 | 250 | 16 | BR280D2 | 98.90 |
| 315 | 300 | 19 | BR315D2 | 139.40 |
| 355 | 350 | 22 | BR355DE | P.O.A |
| 400 | 400 | 22 | BR400D2 | 218.60 |
| 450 | 450 | 25 | BR450D2 | 313.20 |
| 500 | 500 | 29 | BR500D2 | 404.90 |
| 560 | 550 | 32 | BR560D2 | 363.10 |
| 630 | 600 | 32 | BR630D2 | 553.70 |
| 710 | 700 | 35 | BR710D2 | 647.00 |
| 800 | 800 | 38 | BR800D2 | 1,135.10 |
| 1000 | 1000 | 51 | BR1000D2 | 1,647.10 |

### BACKING RINGS - TABLE E GALVANISED STEEL

| Size | | | Code | Price |
|---|---|---|---|---|
| Poly pipe OD | Flange Size | THK | | |
| 63 | 50 | 10 | BR063E2 | 14.00 |
| 75 | 65 | 10 | BR075E2 | 15.40 |
| 90 | 80 | 12 | BR090DE | P.O.A |
| 110 | 100 | 13 | BR110E2 | 29.20 |
| 125 | 125 | 13 | BR125E2 | 44.70 |
| 140 | 125 | 14 | BR140E2 | 39.00 |
| 160 | 150 | 17 | BR160E2 | 52.90 |
| 180 | 150 | 17 | BR180E2 | 48.90 |
| 200 | 200 | 19 | BR200E2 | 71.10 |
| 225 | 200 (8") | 19 | BR225E2 | 68.30 |
| 250 | 250 | 22 | BR250E2 | 115.50 |
| 280 | 250 | 22 | BR280E2 | 109.90 |
| 315 | 300 | 25 | BR315E2 | 147.50 |
| 355 | 350 | 29 | BR355E2 | 261.50 |
| 400 | 400 | 32 | BR400E2 | 317.30 |
| 450 | 450 | 35 | BR450E2 | 431.30 |
| 500 | 500 | 38 | BR500E2 | 531.30 |
| 560 | 550 | 44 | BR560E2 | 653.90 |
| 630 | 600 | 48 | BR630E2 | 819.40 |
| 710 | 700 | 51 | BR710E2 | 912.60 |
| 800 | 800 | 54 | BR800E2 | 1,487.20 |
| 900 | 900 | 64 | BR900E2 | 2,060.30 |
| 1000 | 1000 | 67 | BR1000E2 | 2,113.10 |

# BACKING RINGS





### BACKING RINGS - ANSI GALVANISED STEEL

| Size | | | Code | Price |
|---|---|---|---|---|
| Poly pipe OD | Flange Size | THK | | |
| 63 | 50 | 10 | BR063AA105 | 31.80 |
| 75 | 65 | 10 | BR075A | 36.30 |
| 90 | 80 | 11 | BR090AA105 | 36.90 |
| 110 | 100 | 13 | BR110A | 58.50 |
| 125 | 125 | 14 | BR125A | 72.40 |
| 140 | 125 | 14 | BR140A | 93.40 |
| 160 | 150 | 17 | BR160A | 117.10 |
| 180 | 150 | 17 | BR180AA105 | 60.30 |
| 200 | 200 | 19 | BR200AA105 | 108.40 |
| 225 | 200 (8") | 19 | BR225A | P.O.A |
| 250 | 250 | 22 | BR250A | 160.20 |
| 280 | 250 | 22 | BR280A | 147.50 |
| 315 | 300 | 25 | BR315A | 244.80 |
| 355 | 350 | 29 | BR355A | 336.70 |
| 400 | 400 | 32 | BR400A | 429.80 |
| 450 | 450 | 32 | BR450AA105 | 449.40 |
| 500 | 500 | 43 | BR500A | 510.60 |
| 560 | 550 | 48 | BR560A | 660.90 |
| 630 | 600 | 50 | BR630A | 708.20 |
| 710 | 700 | 50 | BR710A | 653.50 |
| 800 | 800 | 60 | BR800A | P.O.A |

### BLANK FLANGE - GALVANISED STEEL

| Size | | Table D | | Table E | |
|---|---|---|---|---|---|
| Poly pipe OD | Flange | Code | Price | Code | Price |
| 63 | 2" | BF063DE | 28.50 | BF063DE | 28.50 |
| 75 | 2.5" | BF075DE | 28.50 | BF075DE | 28.50 |
| 90 | 3" | BF090E | 30.00 | BF090E | 30.00 |
| 110 | 4" | BF110D | 46.80 | BF110E | 46.80 |
| 125 | 5" | BF125D | 72.40 | BF125E | 72.40 |
| 160 | 6" | BF160D | 104.60 | BF160E | 104.60 |
| 200 | 8" | BF225D | 138.00 | BF225E | 160.20 |
| 250 | 10" | BF280D | 200.10 | BF280E | 267.50 |
| 315 | 12" | BF315D | 312.00 | BF315E | 406.20 |
| 355 | 14" | BF355D | 479.30 | BF355E | 786.50 |
| 400 | 16" | BF400D | 587.80 | BF400E | 844.40 |
| 450 | 18" | BF450D | P.O.A | BF450E | 943.80 |
| 500 | 20" | BF500D | P.O.A | BF500E | 1,327.20 |
| 630 | 24" | BF630D | P.O.A | BF630E | P.O.A |
| 710 | 28" | BF710D | P.O.A | BF710E | 3,890.60 |
| 800 | 32" | BF800D | P.O.A | BF800E | P.O.A |
| 1000 | 40" | BF1000D | P.O.A | BF1000E | P.O.A |

# BACKING RINGS





**BACKING RINGS - TABLE D 316 STAINLESS STEEL**

| Size | | Code | Price |
|---|---|---|---|
| Poly Pipe OD | Flange Size | | |
| 63 | 2" | BRS063D | 50.00 |
| 75 | 2 ½" | BRS075D | 57.00 |
| 90 | 3" | BRS090E | 68.40 |
| 110 | 4" | BRS110D | 108.20 |
| 125 | 5" | BRS125D | 162.40 |
| 140 | 5" | BRS140D | 142.70 |
| 160 | 6" | BRS160D | 168.10 |
| 180 | 6" | BRS180D | 143.90 |
| 200 | 8" | BRS200D | 206.70 |
| 225 | 8" | BRS225D | 200.90 |
| 250 | 10" | BRS250D | 427.50 |
| 280 | 10" | BRS280D | 413.10 |
| 315 | 12" | BRS315D | 582.50 |
| 355 | 14" | BRS355D | 809.10 |
| 400 | 15" | BRS400D | 918.70 |
| 450 | 16" | BRS450D | 1,314.70 |
| 500 | 18" | BRS500D | 1,707.60 |
| 560 | 20" | BRS560D | 1,531.20 |
| 630 | 24" | BRS630D | 2,331.30 |
| 710 | 28" | BRS710D | 2,676.00 |
| 800 | 32" | BRS800D | 4,883.60 |
| 1000 | 40" | BRS1000D | 6,928.60 |

**BACKING RINGS - TABLE E 316 STAINLESS STEEL**

| Size | | Code | Price |
|---|---|---|---|
| Poly Pipe OD | Flange Size | | |
| 63 | 2" | BRS063E | 50.00 |
| 75 | 2 ½" | BRS075E | 57.00 |
| 90 | 3" | BRS090E | 68.40 |
| 110 | 4" | BRS110E | 108.20 |
| 125 | 5" | BRS125E | 175.40 |
| 140 | 5" | BRS140E | 153.90 |
| 160 | 6" | BRS160E | 212.10 |
| 180 | 6" | BRS180E | 195.20 |
| 200 | 8" | BRS200E | 294.80 |
| 225 | 8" | BRS225E | 286.40 |
| 250 | 10" | BRS250E | 482.90 |
| 280 | 10" | BRS280E | 460.10 |
| 315 | 12" | BRS315E | 616.80 |
| 355 | 14" | BRS355E | 1,102.50 |
| 400 | 15" | BRS400E | 1,335.80 |
| 450 | 16" | BRS450E | 1,813.10 |
| 500 | 18" | BRS500E | 2,236.00 |
| 560 | 20" | BRS560E | 2,755.90 |
| 630 | 24" | BRS630E | 3,455.00 |
| 710 | 28" | BRS710E | 3,842.30 |
| 800 | 32" | BRS800E | 6,670.90 |
| 1000 | 40" | BRS1000E | 8,990.80 |


Rodney Industries
STRENGTH IN
EVERY DETAIL.



# IRRIGATION
FITTINGS

## RELIABLE CONNECTIONS FOR EVERY IRRIGATION SYSTEM

Rodney Industries' irrigation fittings are engineered to deliver strong, secure and efficient flow across a wide range of water transfer applications. Our range includes joiners, couplers, adaptors, weld bells, clamps and gaskets, and Bauer-style fittings — all designed to withstand demanding conditions while ensuring dependable performance, easy installation and long-lasting reliability. footvalves and submersible pumps

# JOINERS & COUPLERS





### PLAIN TO HALF JOINER

| Inch | Code | Price |
|---|---|---|
| 3'' x 3½'' | 10004 | 156.30 |
| 4'' x 3'' | 10989 | 158.10 |
| 4'' x 3½'' | 9899 | 173.00 |
| 4'' x 4'' | 10012 | 177.20 |
| 4'' x 5'' | 10024 | 232.10 |
| 5'' x 3½'' | 9987 | 232.10 |
| 5'' x 4'' | 9988 | 236.00 |
| 5'' x 4½'' | 9989 | 286.30 |
| 5'' x 5'' | 10999 | 289.50 |
| 5" x 6" | 10025 | 307.00 |
| 6'' x 4'' | 10023 | 255.10 |
| 6'' x 5'' | 9900 | 291.90 |
| 6'' x 6'' | 10998 | 315.90 |

### THREADED TO HALF JOINER

| Inch | Code | Price |
|---|---|---|
| 2½ '' x 2½'' | 9927 | 156.40 |
| 2'' x 3'' | 9929 | 155.00 |
| 2½'' x 3'' | 9930 | 156.40 |
| 3'' x 2½'' | 9926 | 163.40 |
| 3'' x 3'' | 9931 | 163.40 |
| 2½'' x 3½'' | 9932 | 171.70 |
| 3'' x 3½'' | 9933 | 178.40 |
| 2½'' x 4'' | 9934 | 175.40 |
| 3'' x 4'' | 9935 | 181.50 |
| 4'' x 3½'' | 9937 | 184.70 |
| 4'' x 4'' | 9936 | 189.90 |
| 4'' x 4½'' | 9938 | 240.70 |
| 4'' x 6'' | 9939 | 303.70 |



### FLANGE TO HALF JOINER

| Inch | Code | Price |
|---|---|---|
| 2'' x 2½ '' | 9944 | 156.30 |
| 2½ '' x 3'' | 9946 | 173.00 |
| 3'' x 3'' | 9947 | 177.20 |
| 4'' x 2½'' | 10033 | 174.70 |
| 4'' x 3'' | 9948 | 180.40 |
| 3'' x 3½'' | 9949 | 190.70 |
| 4'' x 3½ '' | 9950 | 204.90 |
| 5'' x 3½'' | 9951 | 218.40 |
| 6'' x 3½'' | 9952 | 229.10 |
| 3'' x 4'' | 9953 | 197.00 |
| 4'' x 4'' | 9964 | 237.80 |

### FLANGE TO HALF JOINER

| Inch | Code | Price |
|---|---|---|
| 4'' x 5'' | 9961 | 241.80 |
| 5'' x 4'' | 9954 | 220.20 |
| 6'' x 4'' | 9955 | 236.00 |
| 4'' x 4½'' | 9956 | 220.20 |
| 5'' x 4½'' | 9957 | 277.60 |
| 6'' x 4½'' | 9958 | 284.60 |
| 5'' x 5'' | 10007 | 249.50 |
| 5'' x 6'' | 10008 | 276.00 |
| 6'' x 5'' | 9960 | 286.30 |
| 6'' x 6'' | 9962 | 291.90 |

# JOINERS & COUPLERS





### HOSE JOINER

| Inch | Code | Price |
|---|---|---|
| 2'' | 9980 | 79.10 |
| 2½' | 9981 | 80.50 |
| 3'' | 9982 | 82.30 |
| 3½' | 9983 | 98.20 |
| 4'' | 9984 | 106.90 |
| 4½' | 9985 | 184.40 |
| 5'' | 10005 | 201.10 |
| 6'' | 10006 | 239.30 |

### HOSE JOINER REDUCING

| Inch | Code | Price |
|---|---|---|
| 2 ½'' x 3'' | 10031 | 147.50 |
| 3'' x 3½ '' | 10003 | 171.60 |
| 3'' x 4'' | 9986 | 174.70 |
| 3½ '' x 4'' | 9978 | 195.50 |
| 4'' x 4½" | 9979 | 202.50 |





### COUPLER JOINER

| Inch | Code | Price |
|---|---|---|
| 3'' x 3'' | 9973 | 378.90 |
| 4'' x 3'' | 9974 | 505.60 |
| 4'' x 4'' | 9975 | 414.10 |

### RING TYPE COUPLER - (HOSETAIL X COUPLER)

| Inch | Code | Price |
|---|---|---|
| 2½ '' x 3'' | 9990 | 173.00 |
| 2 ½'' x 4'' | 9996 | 178.70 |
| 3'' x 3'' | 9991 | 177.20 |
| 3 ½'' x 3'' | 10002 | 216.90 |
| 3'' x 4'' | 9992 | 211.20 |
| 3 ½'' x 4'' | 9997 | 234.30 |
| 3 ½'' x 5'' | 10014 | 280.80 |
| 4'' x 4'' | 9998 | 206.60 |
| 4'' x 5'' | 10015 | 284.60 |
| 4 ½'' x 4'' | 9999 | 277.60 |
| 4'' x 3'' | 10000 | 225.00 |
| 4 ½'' x 5'' | 10001 | 333.50 |
| 5'' x 4'' | 10010 | 307.00 |
| 5'' x 5'' | 10018 | 364.40 |
| 6'' x 6'' | 10016 | 380.40 |



### STANDARD COUPLER (HOSETAIL X COUPLER)

| Inch | Code | Price |
|---|---|---|
| 3"x 4" | 10009 | 472.90 |
| 3½ '' x 4" | 9993 | 412.30 |
| 4'' x 4'' | 9994 | 429.00 |
| 4½ '' x 4'' | 9995 | 476.00 |

# FLANGED FITTINGS





### FLANGE TO BELL

| Inch | Code | Price |
|---|---|---|
| 2½" x 3" | 9959 | 236.00 |
| 3" x 3" | 9965 | 239.30 |
| 4" x 3" | 9969 | 277.60 |
| 3" x 4" | 9968 | 291.90 |
| 4" x 4" | 9963 | 300.70 |
| 5" x 4" | 9967 | 319.00 |
| 5" x 5" | 10019 | 283.20 |
| 6" x 4" | 9966 | 333.50 |
| 6" x 6" | 10017 | 353.30 |
| 6" x 8" | 10020 | 435.60 |
| 8" x 8" | 10021 | 391.00 |

### MAINLINE ADAPTOR (BELL X SPIGOT)

| Inch | Code | Price |
|---|---|---|
| 3" x 3" | 9970 | 264.00 |
| 3" x 4" | 9971 | 284.60 |
| 3" x 5" | 10011 | 297.40 |
| 4" x 4" | 9972 | 303.70 |
| 4" x 5" | 9976 | 314.30 |
| 4" x 6" | 10032 | 321.60 |
| 5" x 5" | 10022 | 322.90 |





### FLANGE TO BELL NO LUGS \ LINKS

| Inch | Code | Price |
|---|---|---|
| 3" x 3" | 9965HAB | POA |
| 4" x 4" | 9963HA | 195.50 |
| 5" x 5" | 10019HA | 255.10 |
| 6" x 6" | 10017HA | 291.90 |
| 8" x 8" | 10021HA | 490.40 |

### FLANGE TO MALE SPIGOT

| Inch | Code | Price |
|---|---|---|
| 3" x 3" | 9965MSA | 255.10 |
| 4" x 4" | 9963MSA | 261.50 |
| 5" x 5" | 10019MSA | 335.00 |
| 6" x 6" | 10017MSA | 366.10 |
| 8" x 8" | 10021MSA | 540.60 |

# WELD BELLS



### WELD BELLS C/W LUGS AND LINKS (BLACK)

| Inch | mm | Code | Price |
|---|---|---|---|
| 3" | 80 | 9922 | 152.40 |
| 4" | 100 | 9923 | 134.80 |
| 5" | 125 | 9294 | 177.20 |
| 6" | 150 | 9295 | 208.20 |
| 8" | 200 | 9315 | 216.90 |



### WELD BELLS C/W LUGS AND LINKS (GALVANIZED)

| Inch | mm | Code | Price |
|---|---|---|---|
| 3" | 80 | 9920 | 159.50 |
| 4" | 100 | 9921 | 164.40 |
| 5" | 125 | 9290 | 187.50 |
| 6" | 150 | 9291 | 220.20 |
| 8" | 200 | 9313 | 236.00 |



### WELD BELLS W/O LUGS AND LINKS (BLACK)

| Inch | mm | Code | Price |
|---|---|---|---|
| 3" | 80 | 9297 | 68.60 |
| 4" | 100 | 9298 | 87.90 |
| 5" | 125 | 9299 | 103.80 |
| 6" | 150 | 9300 | 128.50 |
| 8" | 200 | 9317 | 177.90 |



### THREAD TO WELD BELLS C/W LUGS AND LINKS (GALVANIZED)

| Inch | mm | Code | Price |
|---|---|---|---|
| 4" x 4" | 100 x 100 | 10026 | 362.80 |
| 5" x 5" | 125 x 125 | 10027 | 382.80 |
| 4" x 5" | 100 x 125 | 10028 | 374.80 |

*Note: All Weld Bells supplied with round-back gaskets

# CLAMPS AND INSERTS



### WELD BELL CLAMPS (TRAVIS CLAMPS)

| Inch | mm | Code | Price |
|---|---|---|---|
| 4" | 100 | 9304 | 76.50 |
| 5" | 125 | 9305 | 78.40 |
| 6" | 150 | 9306 | 95.70 |
| 8" | 200 | 9321 | 103.80 |



### ROUND BACK GASKETS

| Inch | mm | Code | Price |
|---|---|---|---|
| 3" | 80 | 9924 | 8.10 |
| 4" | 100 | 9925 | 11.30 |
| 5" | 125 | 9310 | 16.70 |
| 6" | 150 | 9312 | 21.60 |
| 8" | 200 | 9319 | 24.80 |



### JOINER RING ONLY

| Inch | Code | Price |
|---|---|---|
| 2'' | 9901 | 23.00 |
| 2½" | 9902 | 23.00 |
| 3'' | 9903 | 24.80 |
| 3½" | 9904 | 26.50 |
| 4'' | 9905 | 28.00 |
| 4½" | 9906 | 31.10 |
| 5'' | 9908 | 32.80 |

# BAUER STYLE FITTINGS

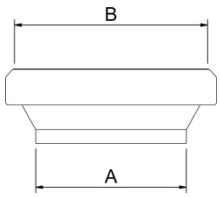


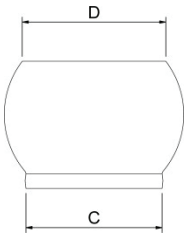


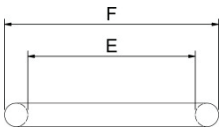


| SIZE | | FEMALE COUPLING | | MALE COUPLING | | RUBBER SEAL | |
|---|---|---|---|---|---|---|---|
| INCHES | MM | A | B | C | D | E | F |
| 2 | 50 | 48.5 | 72 | 50 | 48.5 | 62 | 80.6 |
| 3 | 76 | 76 | 98 | 81 | 76 | 88.5 | 114.5 |
| 3.5 | 89 | 89 | 121 | 93 | 89 | 108 | 134 |
| 4 | 108 | 108 | 147 | 112 | 108 | 132 | 162 |
| 5 | 133 | 132 | 163 | 137 | 132 | 152 | 188 |
| 6 | 159 | 158 | 182 | 155 | 158 | 170 | 208 |
| 8 | 194 | 194 | 231 | 200 | 194 | 220 | 258 |





### BLACK STEEL COUPLING COMPLETE WITH RUBBER SEAL

| Inch | mm | Code | Price |
|---|---|---|---|
| 2 | 50 | 12000 | 50.80 |
| 3 | 76 | 12002 | 68.70 |
| 3.5 | 89 | 12004 | 98.90 |
| 4 | 108 | 12006 | 117.00 |
| 5 | 133 | 12008 | 165.10 |
| 6 | 159 | 12010 | 200.20 |

### BLACK STEEL MALE COUPLING

| Inch | mm | Code | Price |
|---|---|---|---|
| 2 | 50 | 12014 | 11.60 |
| 3 | 76 | 12016 | 11.60 |
| 3.5 | 89 | 12018 | 18.90 |
| 4 | 108 | 12020 | 23.70 |
| 5 | 133 | 12022 | 27.00 |
| 6 | 159 | 12024 | 38.60 |
| 8 | 194 | 12026 | 68.70 |

# BAUER STYLE FITTINGS



### GALVANIZED STEEL LEVER RING

| Inch | mm | Code | Price |
|---|---|---|---|
| 2 | 50 | 12028 | 38.60 |
| 3 | 76 | 12030 | 55.60 |
| 3.5 | 89 | 12032 | 76.10 |
| 4 | 108 | 12034 | 94.00 |
| 5 | 133 | 12036 | 147.20 |
| 6 | 159 | 12038 | 188.90 |
| 8 | 194 | 12040 | 293.40 |



### BLACK STEEL FEMALE COUPLING WITH RUBBER SEAL

| Inch | mm | Code | Price |
|---|---|---|---|
| 2 | 50 | 12042 | 18.90 |
| 3 | 76 | 12044 | 18.90 |
| 3.5 | 89 | 12046 | 27.00 |
| 4 | 108 | 12048 | 35.20 |
| 5 | 133 | 12050 | 49.10 |
| 6 | 159 | 12052 | 65.40 |
| 8 | 194 | 12054 | 81.00 |



### RUBBER O'RING SEAL

| Inch | mm | Code | Price |
|---|---|---|---|
| 2 | 50 | 12056 | 6.50 |
| 3 | 76 | 12058 | 6.50 |
| 3.5 | 89 | 12060 | 9.90 |
| 4 | 108 | 12062 | 11.60 |
| 5 | 133 | 12064 | 15.60 |
| 6 | 159 | 12066 | 18.90 |
| 8 | 194 | 12068 | 22.20 |



### GALVANIZED STEEL MALE END PLUG WITH LEVER RING

| Inch | mm | Code | Price |
|---|---|---|---|
| 2 | 50 | 12084 | 84.40 |
| 3 | 76 | 12086 | 138.00 |
| 3.5 | 89 | 12088 | 165.10 |
| 4 | 108 | 12090 | 168.50 |
| 5 | 133 | 12092 | 247.70 |
| 6 | 159 | 12094 | 416.00 |
| 8 | 194 | 12096 | 513.30 |



### GALVANIZED STEEL FEMALE COUPLING WITH HOSE TAIL & RUBBER SEAL - (BAUER X TAIL)

| Inch | mm | Code | Price |
|---|---|---|---|
| 2 | 50 x 50 | 12098 | 45.80 |
| 3 | 76 x 76 | 12102 | 52.30 |
| 3.5 | 89 x 76 | 12104 | 68.70 |
| 4 | 108 x 100 | 12108 | 90.00 |
| 5 | 133 x 125 | 12112 | 124.20 |
| 6 | 159 x 150 | 12114 | 151.10 |
| 8 | 194 x 200 | 12118 | 286.20 |



### GALVANIZED STEEL MALE COUPLING WITH HOSE TAIL & LEVER RING - (BAUER X TAIL)

| Inch | mm | Code | Price |
|---|---|---|---|
| 2 | 50 x 50 | 12120 | 68.70 |
| 3 | 76 x 76 | 12124 | 125.90 |
| 3.5 | 89 x 89 | 12128 | 136.70 |
| 4 | 108 x 100 | 12130 | 168.50 |
| 5 | 133 x 125 | 12134 | 252.50 |
| 6 | 159 x 150 | 12136 | 320.40 |
| 8 | 194 x 200 | 12140 | 510.00 |

# BAUER STYLE FITTINGS



### GALVANIZED STEEL FEMALE COUPLING THREADED BSPM WITH RUBBER SEAL – (BAUER X BSPM)

| mm x Inch | Code | Price |
|---|---|---|
| 50 mm x 2" | 12144 | 104.50 |
| 76 mm x 3" | 12148 | 156.20 |
| 89 mm x 3" | 12150 | 166.70 |
| 108 mm x 4" | 12152 | 136.70 |
| 133 mm x 5" | 12154 | 225.70 |
| 159 mm x 6" | 12156 | 270.50 |
| 194 mm x 8" | 12158 | 303.30 |



### GALVANIZED STEEL FEMALE END PLUG WITH RUBBER SEAL

| Inch | mm | Code | Price |
|---|---|---|---|
| 2 | 50 | 12070 | 76.10 |
| 3 | 76 | 12072 | 79.20 |
| 3.5 | 89 | 12074 | 90.00 |
| 4 | 108 | 12076 | 94.00 |
| 5 | 133 | 12078 | 106.30 |
| 6 | 159 | 12080 | 111.20 |
| 8 | 194 | 12082 | 160.30 |



### GALVANIZED STEEL FLANGED FEMALE COUPLING WITH RUBBER SEAL – (FLANGE X BAUER)

| Inch | mm | Code | Price |
|---|---|---|---|
| 2 | 50 x 50 | 12180 | 188.90 |
| 3 | 80 x 89 | 12182 | 197.00 |
| 4 | 100 x 108 | 12184 | 228.90 |
| 5 | 125 x 133 | 12186 | 259.10 |
| 6 | 150 x 159 | 12188 | 305.00 |
| 8 | 200 x 194 | 12190 | 375.20 |



### GALVANIZED STEEL FLANGED MALE COUPLING WITH LEVER RING – (FLANGE X BAUER)

| Inch | mm | Code | Price |
|---|---|---|---|
| 2 | 50 x 50 | 12194 | 251.00 |
| 3 | 80 x 89 | 12196 | 268.10 |
| 4 | 100 x 108 | 12198 | 295.10 |
| 5 | 125 x 133 | 12200 | 357.20 |
| 6 | 150 x 159 | 12202 | 438.10 |
| 8 | 200 x 194 | 12204 | 776.50 |



### GALVANIZED STEEL MALE COUPLING THREADED BSPM WITH LEVER RING – (BAUER X BSPM)

| mm x Inch | Code | Price |
|---|---|---|
| 50 mm x 2" | 12162 | 90.00 |
| 76 mm x 3" | 12166 | 188.90 |
| 89 mm x 3" | 12168 | 206.00 |
| 108 mm x 4" | 12170 | 242.00 |
| 133 mm x 5" | 12172 | 331.00 |
| 159 mm x 6" | 12174 | 384.20 |
| 194 mm x 8" | 12176 | 643.40 |



Rodney Industries

Phone: 07 3624 0300
Email: sales@rodneyind.com.au
Web: www.rodneyind.com.au